PD18

Development of TPC trigger hodoscope using multi MPPC signal readout for J-PARC E42/E45 hadron experiment

Wooseung Jung*, J.K. Ahn, S.H. Kim(Korea Univ.),
Y. Ichikawa, S.Hasegawa, H.Sako,
K.Tanida, S.Sato(JAEA),
K.H.Hicks(Ohio Univ.), S.H, Hwang(KRISS)

Hadron & Nuclear Physics Lab

HYPERON SPECTROMETER @J-PARC

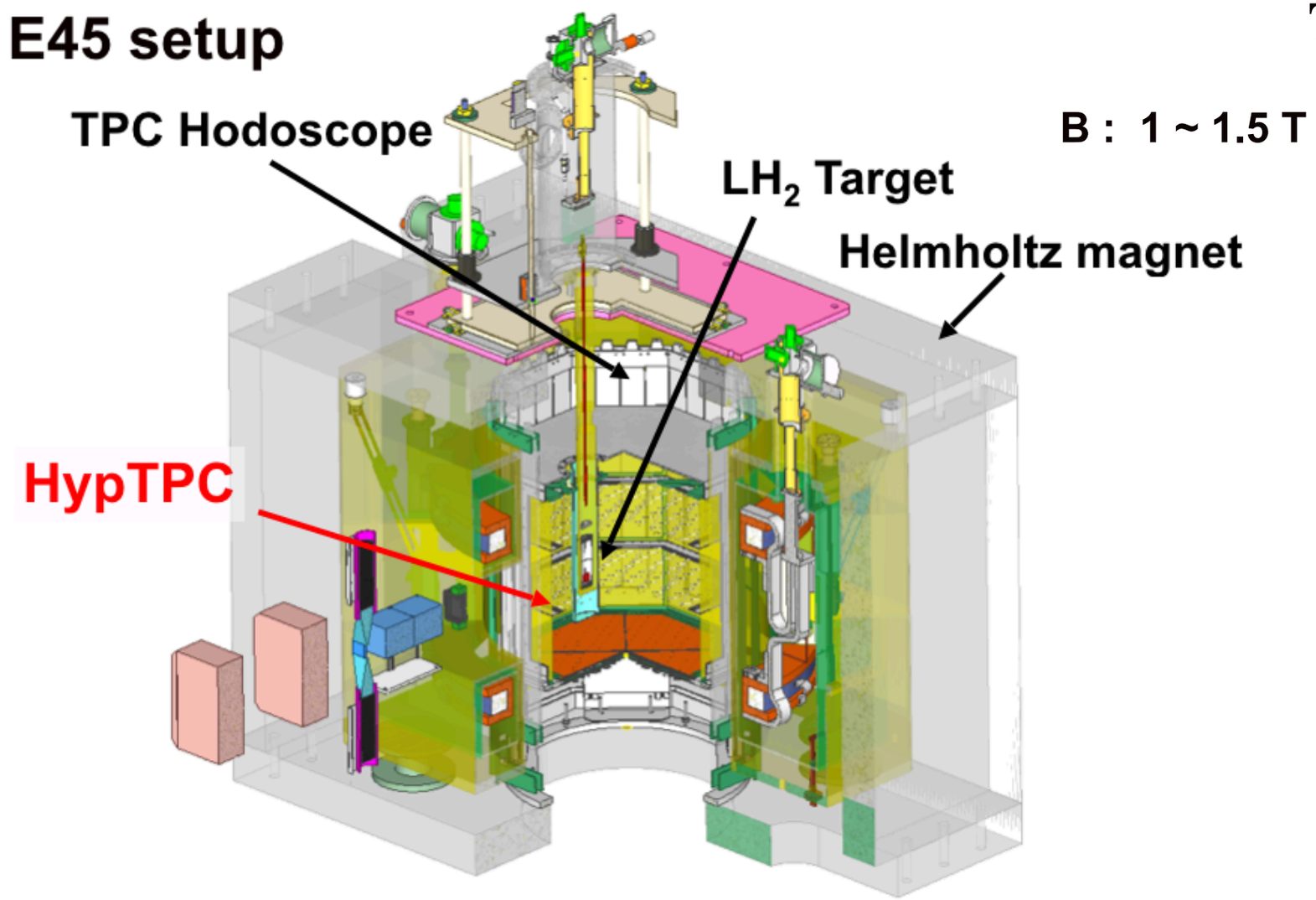

B : 1 ~ 1.5 T

TPC trigger hodoscope

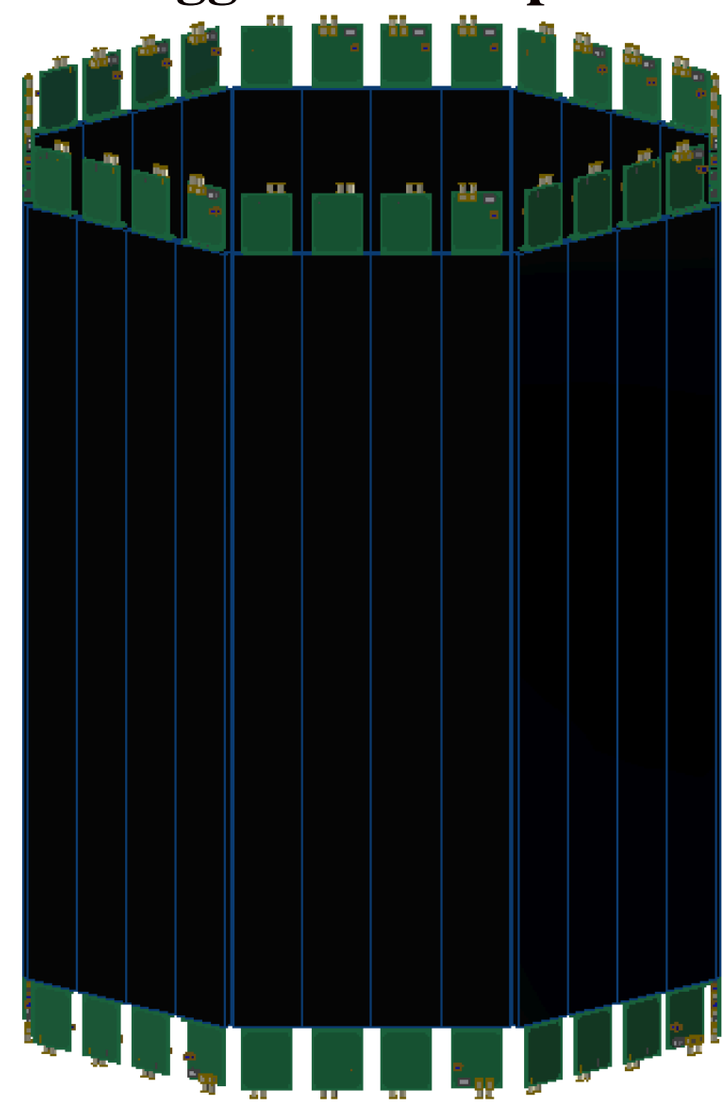

E42/45/72 Hadron experiments @ J-PARC

- E42 : Search for the *H*-dibaryon(*uuddss*) in mass region near ΛΛ threshold via $^{12}C(K^-, K^+)$ reaction
- E45 : Baryon spectroscopy with (π,2π) reactions at J-PARC E45
- E72 : Search for a narrow Λ* resonance using the p(K⁻,Λ)η reaction

TPC TRIGGER HODOSCOPE

Suppression of 30 % background

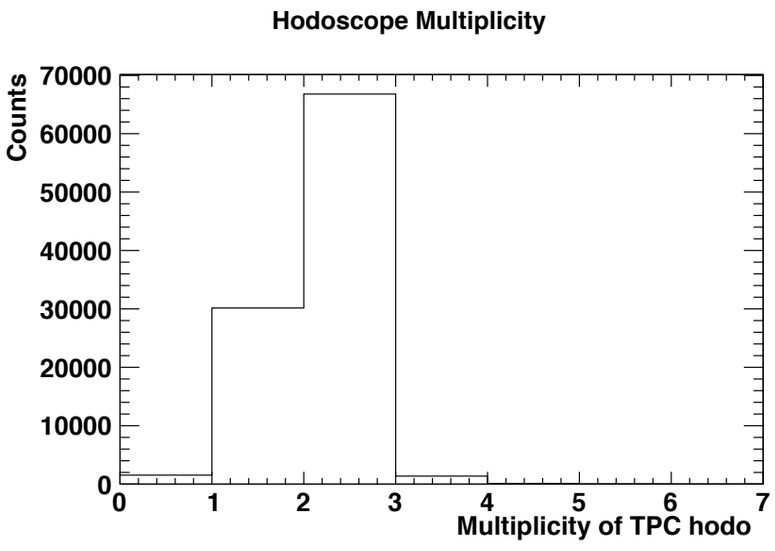

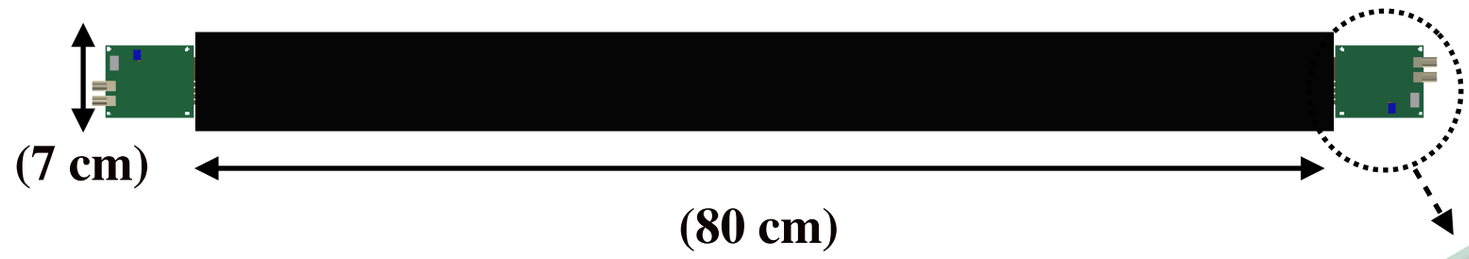

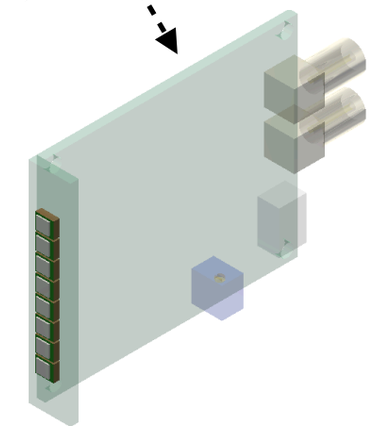

(8 MPPCs)

MPPC - S13360-3050CS

$\pi^+p \rightarrow \pi^0\pi^+p$ p_π=0.835 GeV/c

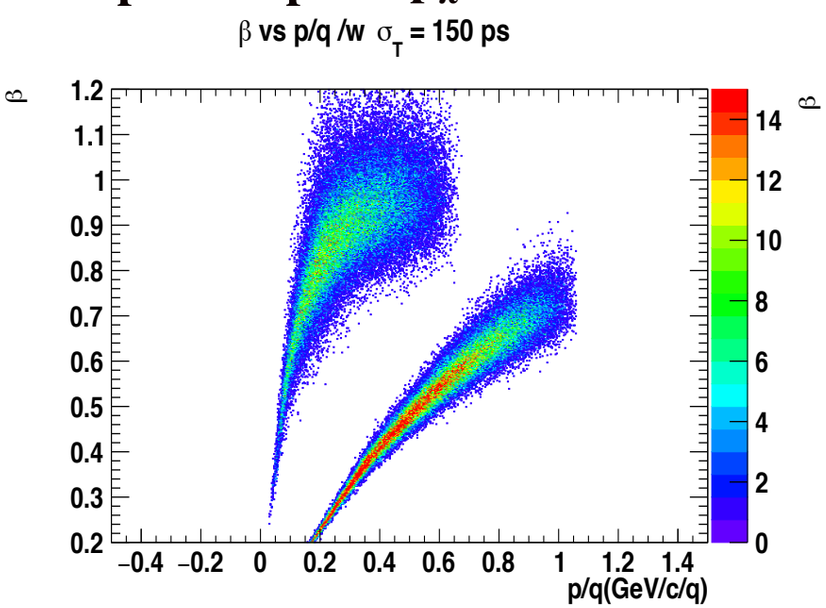

p_π=1.235 GeV/c

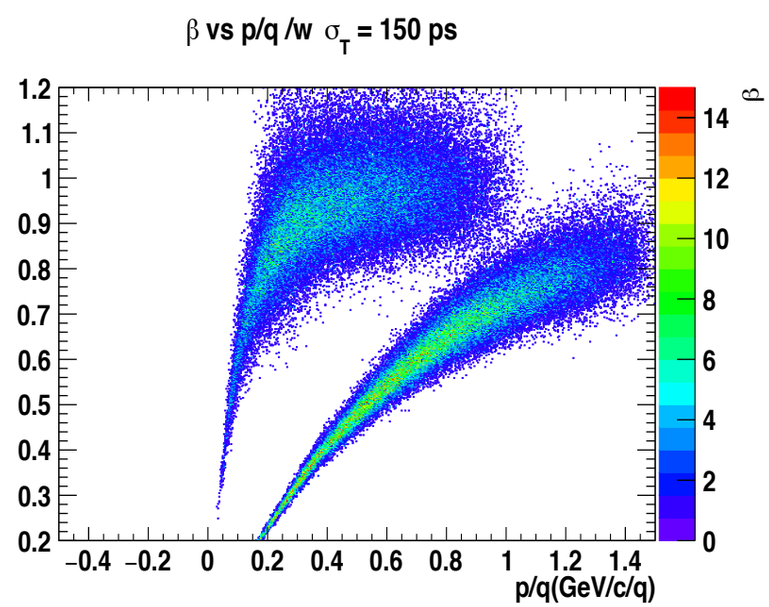

p_π=2.000 GeV/c

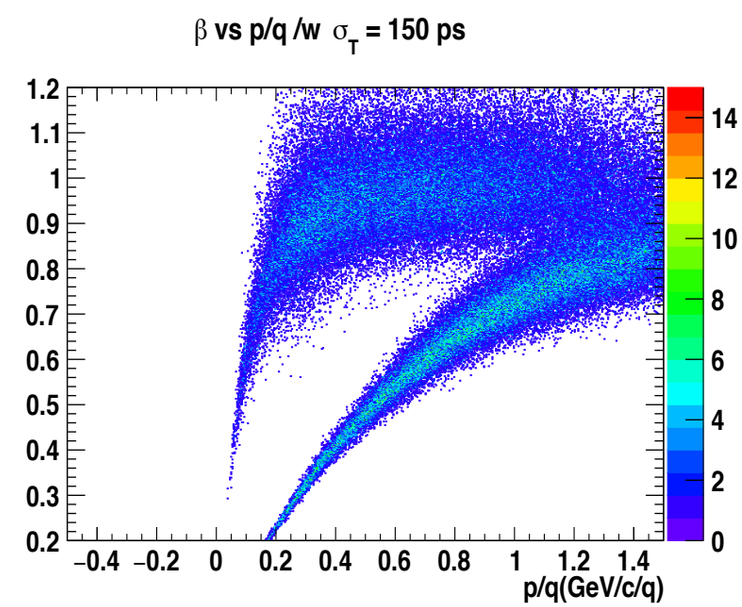

METHODS OF BIASING MULTI-MPPCS

* Weak points

	Series connection	Parallel connection	Individual biasing
Schematic drawing : MPPC : Preamp	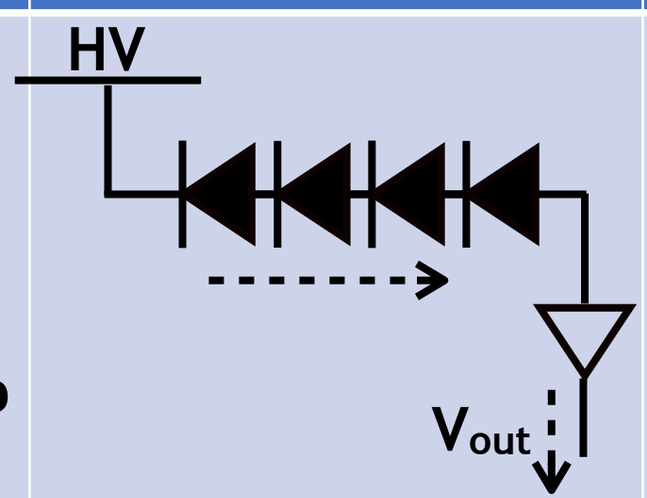	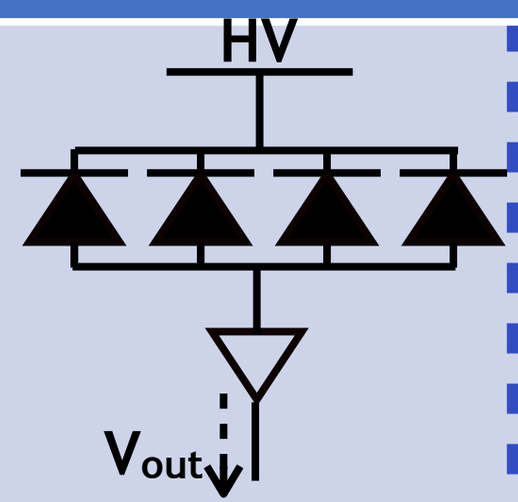	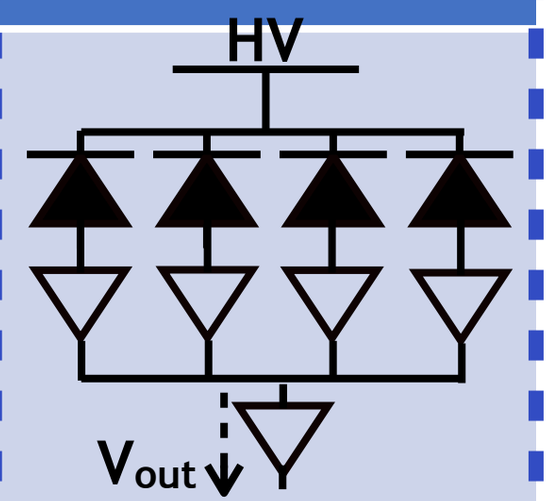
Bias HV	~58 x [N ch] V	~58 V	~58 V
S/N	○	bad (due to long tail)	○

PROTOTYPE TEST FOR BIASING METHOD

Setup & purpose

- Prototype with short scintillator and 4 MPPCs
- Directly compare the time resolution of the three biasing conditions

(side view)

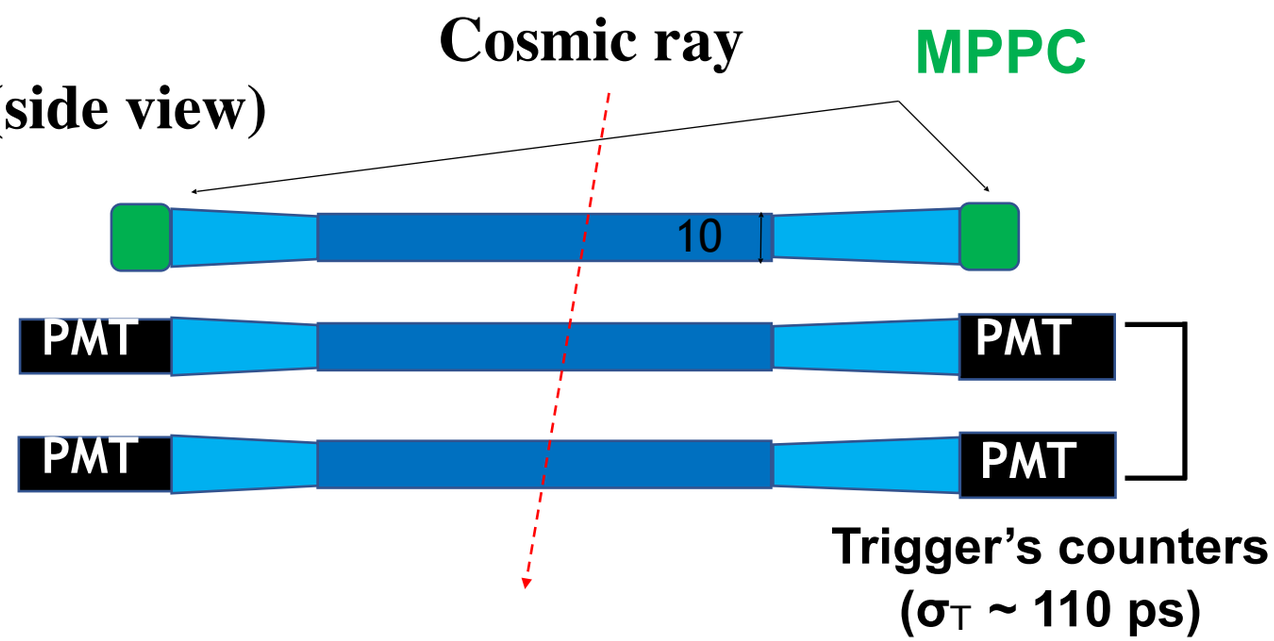

(top view)

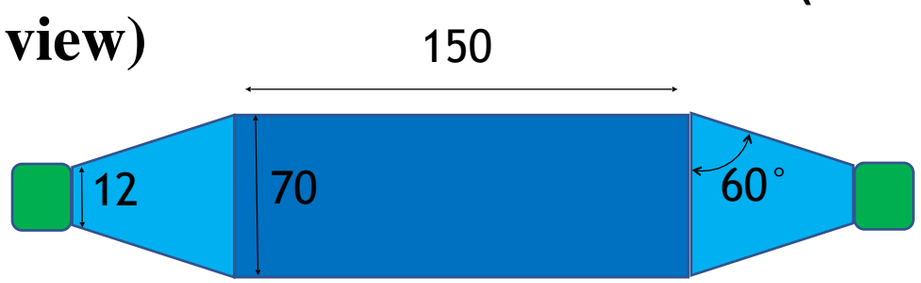

Test conditions (MPPC - S13360-3050CS)

1. series connection

196 ± 3 ps

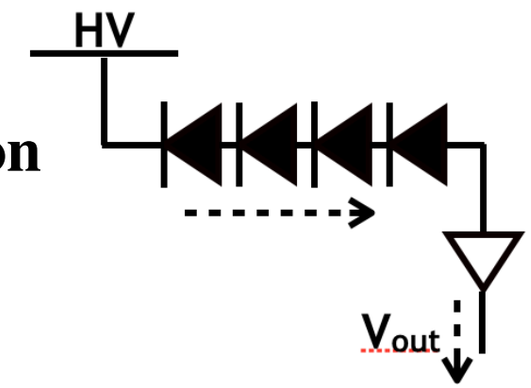

2. parallel connection

273 ± 3 ps

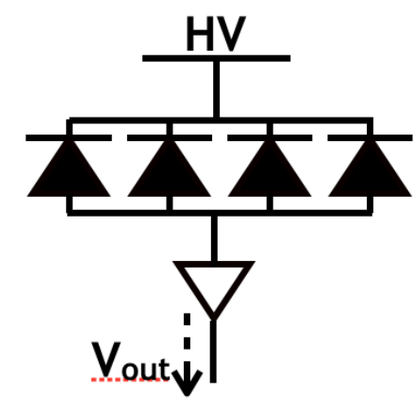

3. individual biasing

<u>(w/ summing amplifier)</u>

170 ± 4 ps

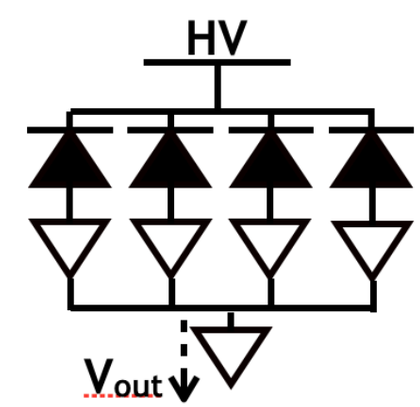

NEW READOUT CIRCUIT DEVELOPMENT

- It consists of separates boards. 8 preamps and MPPCs, the other is a summing-amplifier.
- Up to 8 MPPCs available on one side of the scintillator

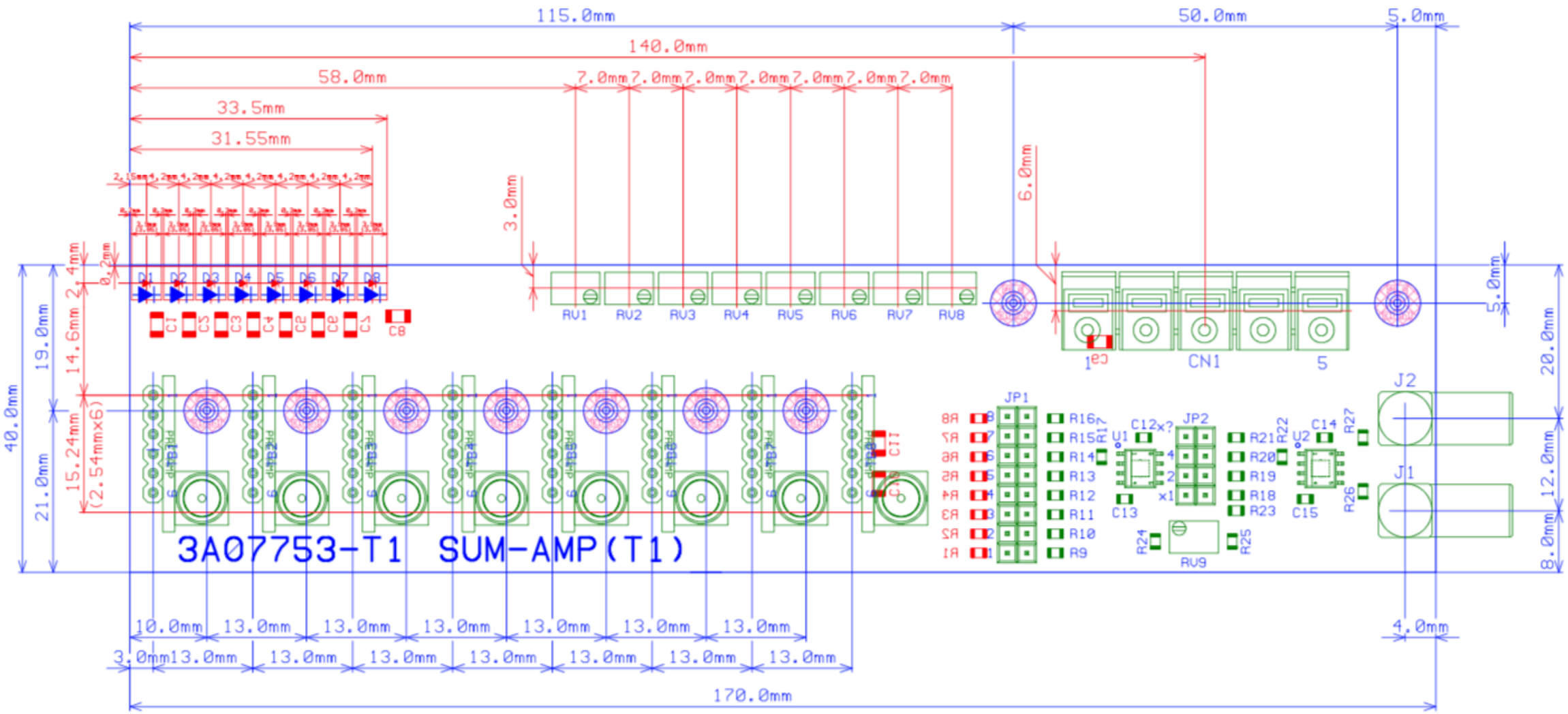

CIRCUIT DIAGRAM

Preamplifier part

AD8000 (ultra-fast Op-amp)

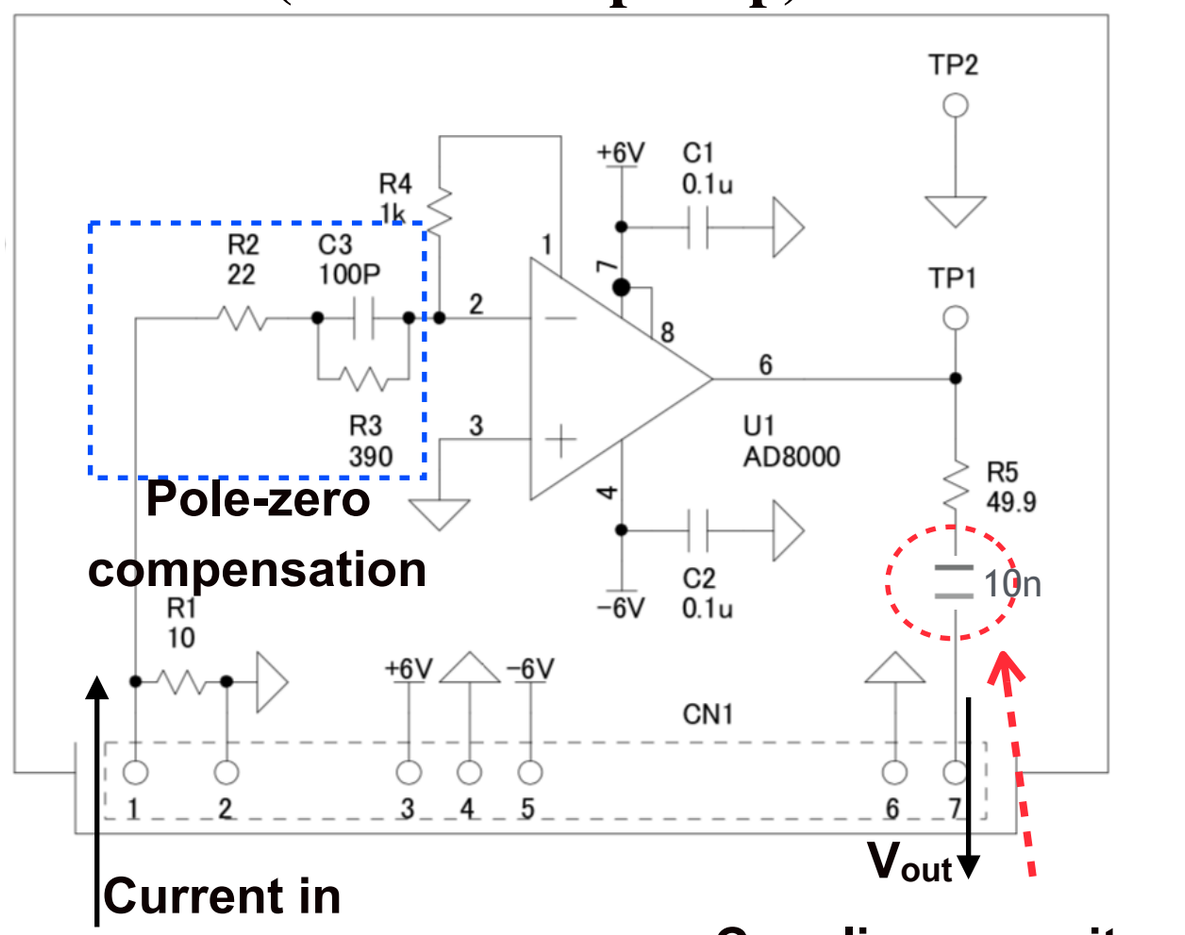

Coupling capacitor to reduce DC offset

$$V_{in} = i_{MPPC} * R_1$$

$$V_{out}/V_{in} = R_4/(R_2 + \frac{R_3}{2\pi f c R_3 + 1}) \sim 19.4$$

Sum-amplifier part

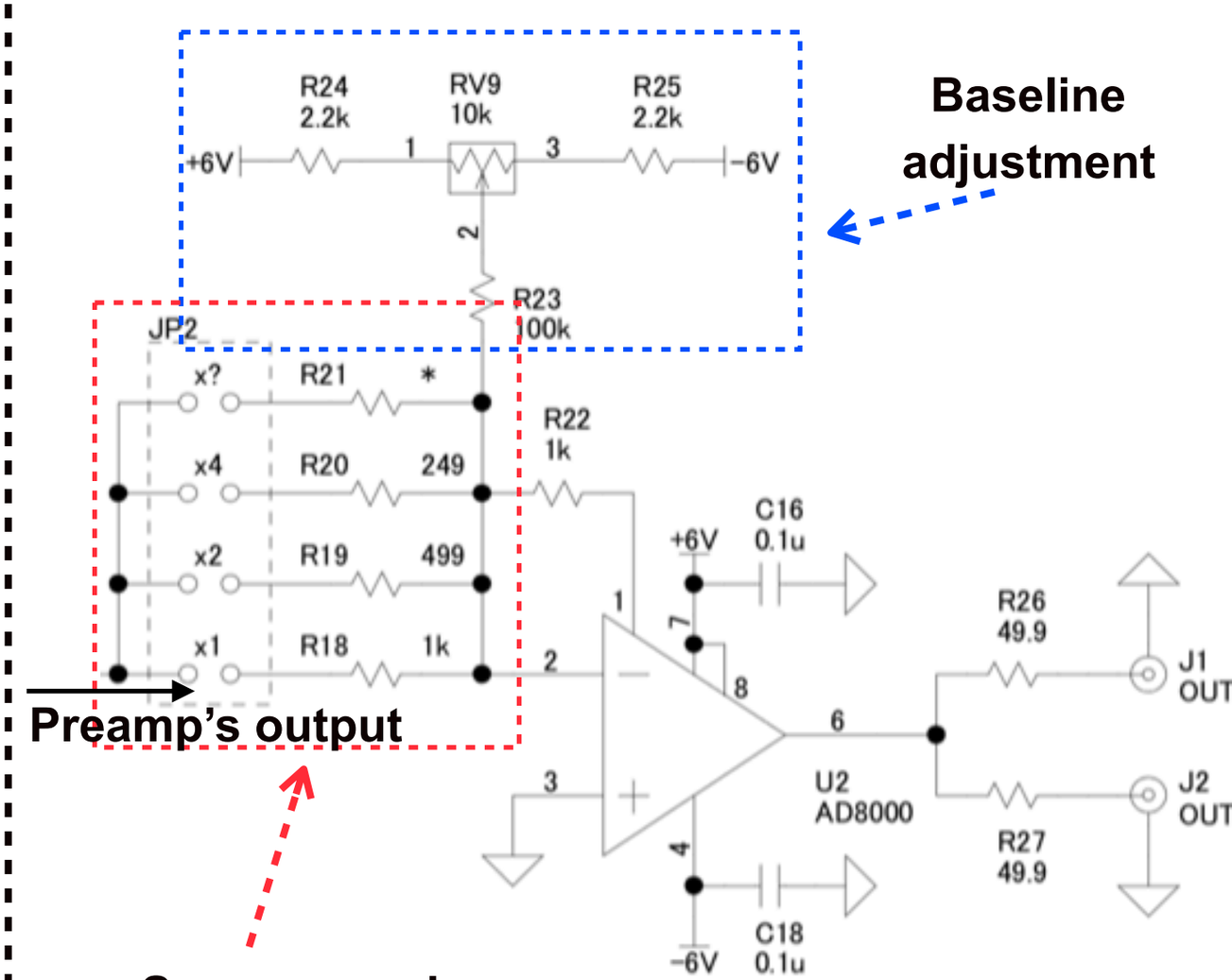

MULTIPLE MPPC SIGNAL READOUT CIRCUIT

New readout circuit

PCB (front side)

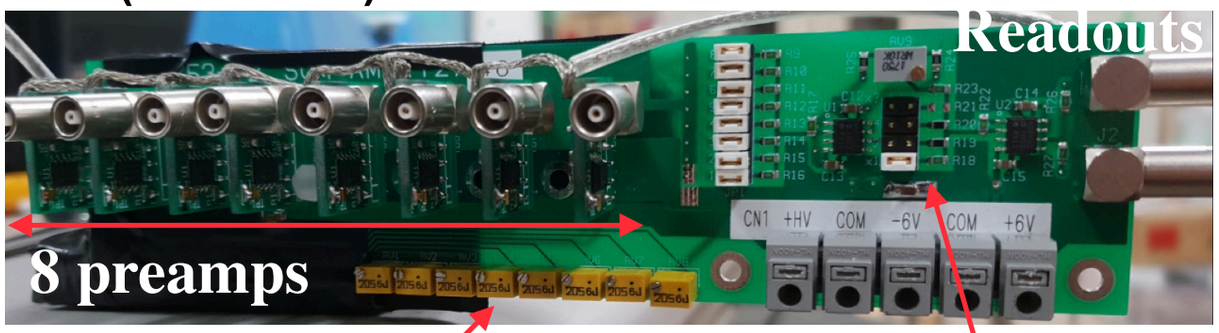

Bias HV adjustment **Amp gain adjustment**

PCB (back side) - MPPCs on the board

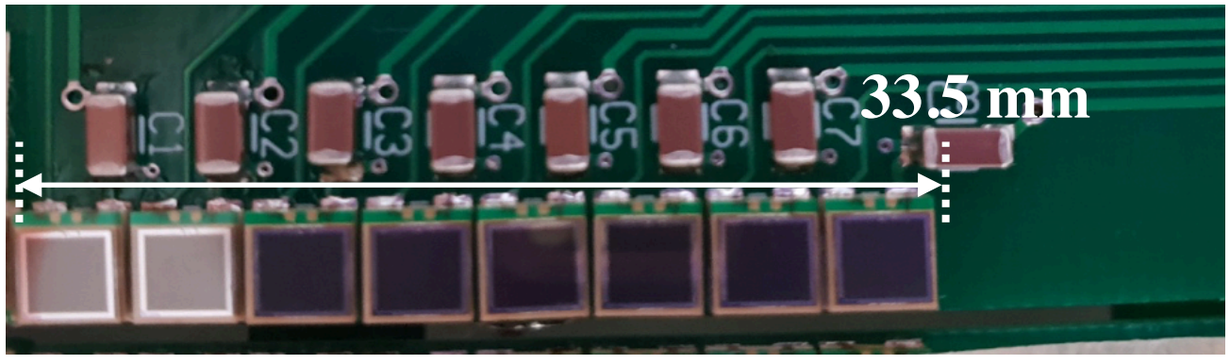

S13360-3050PE (50 um pixel, 3 x 3 mm²)

Scintillator + ^{90}Sr output

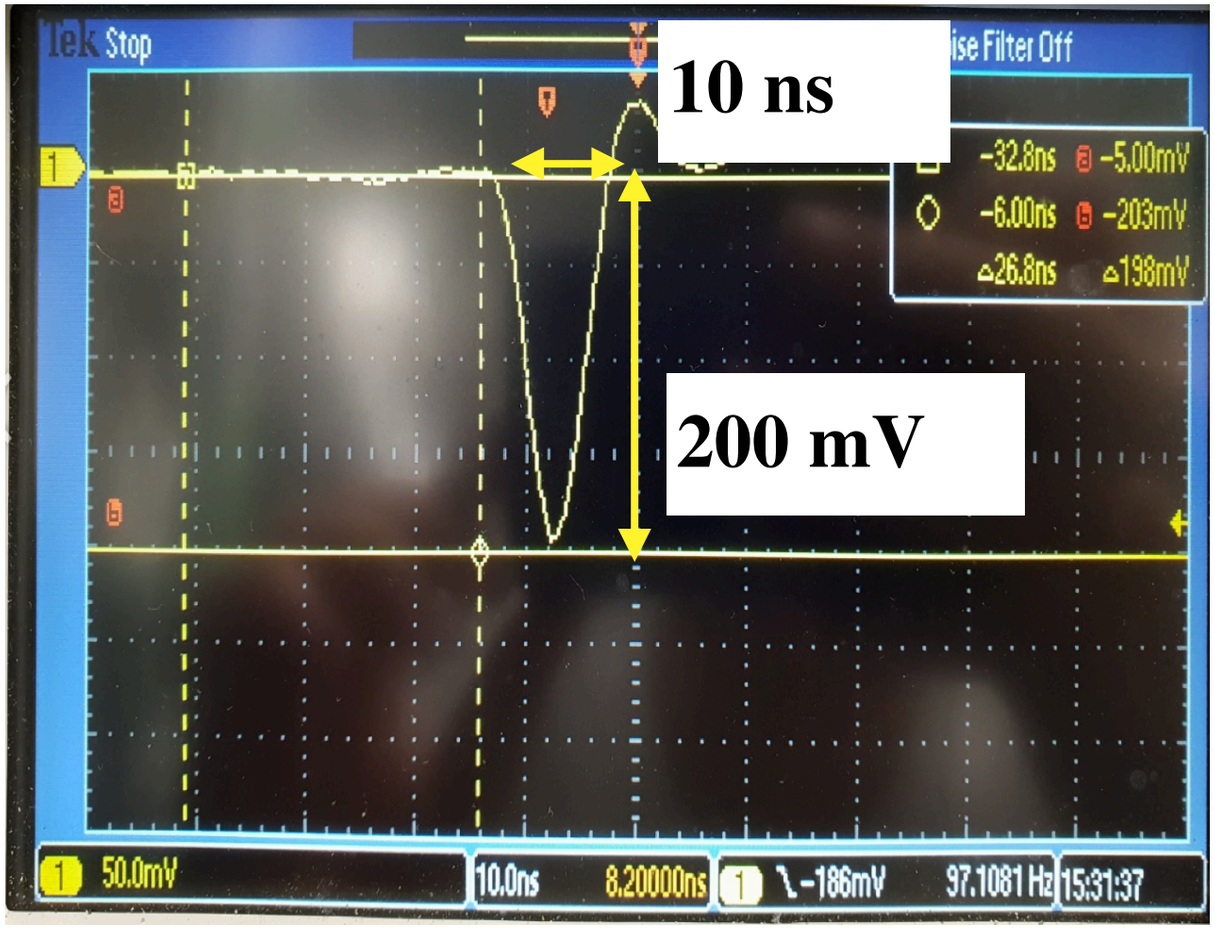

TEST FOR TIME RESOLUTION MEASUREMENT

Setup & purpose

- **Measure the time resolution of the real-size hodoscope using the new readout circuit.**

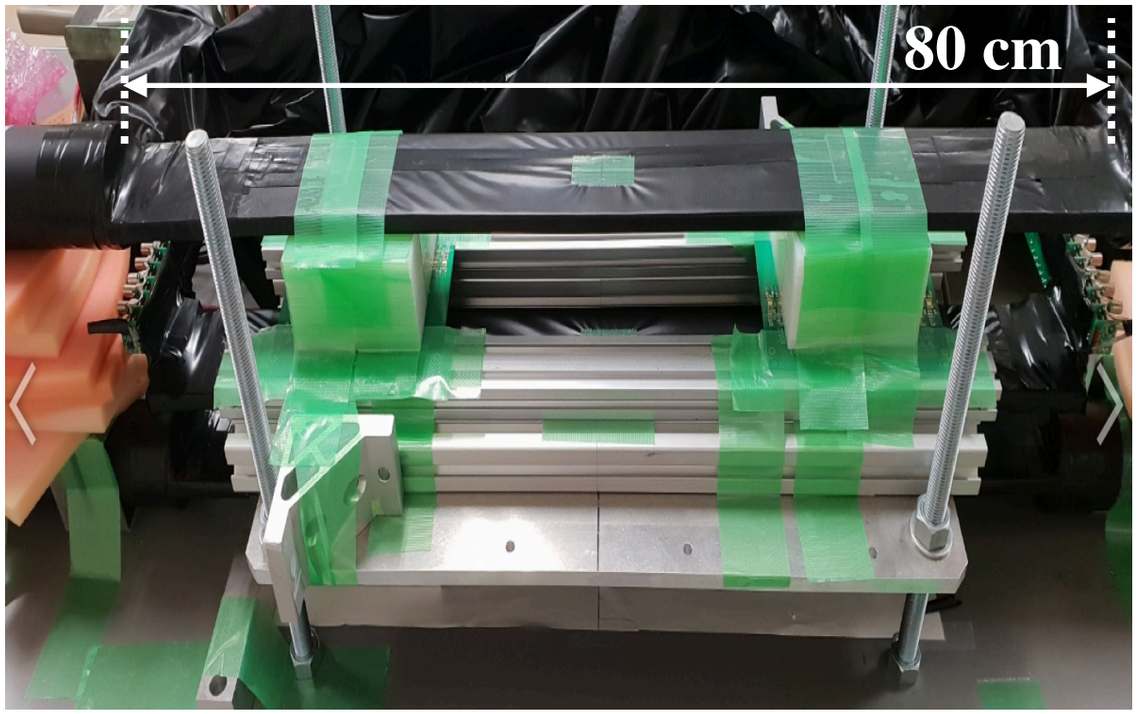

Setup & purpose

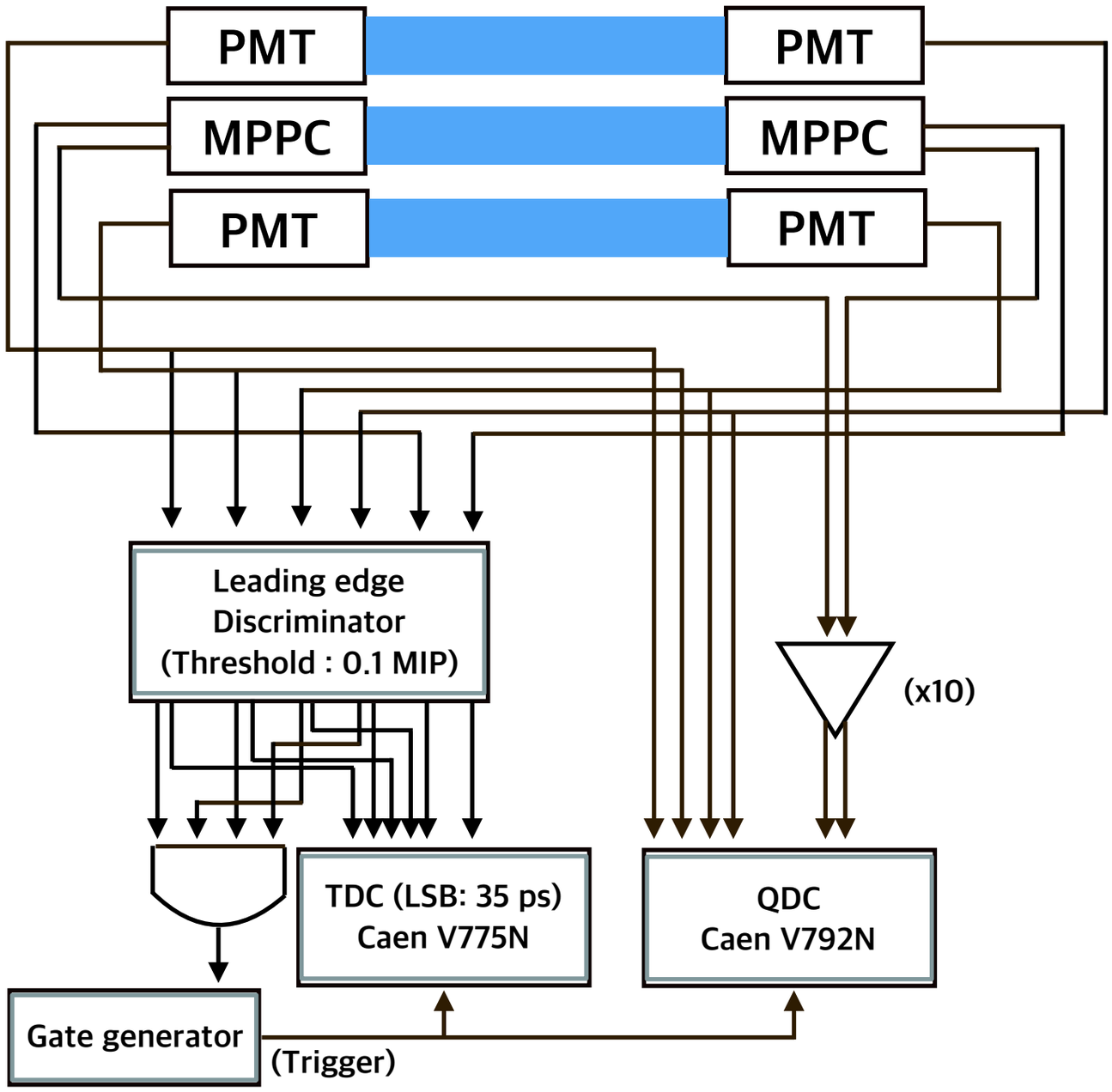

ANALYSIS & TEST RESULT

Timewalk correction

$$t' = t + \frac{a}{\sqrt{Q - Q_0}}$$

Red line : TOF distribution after time walk correction

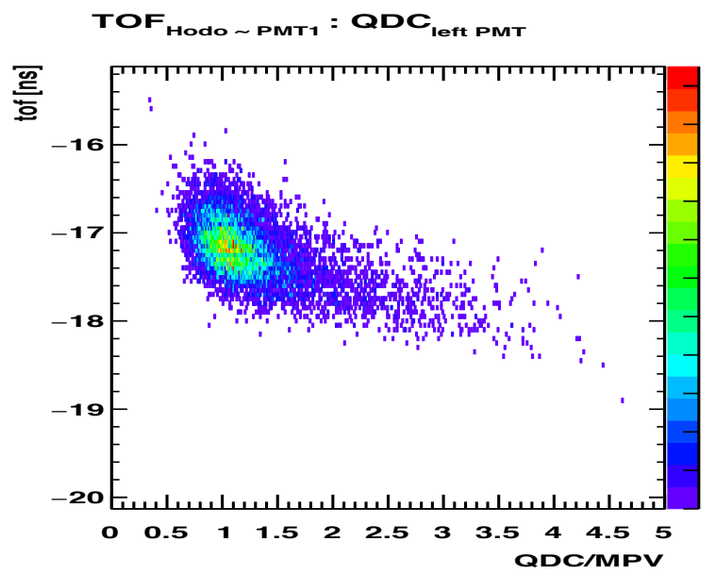

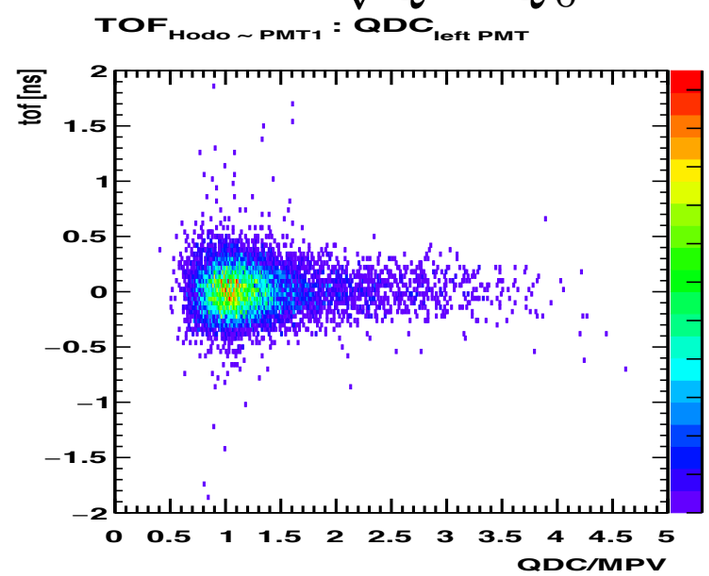

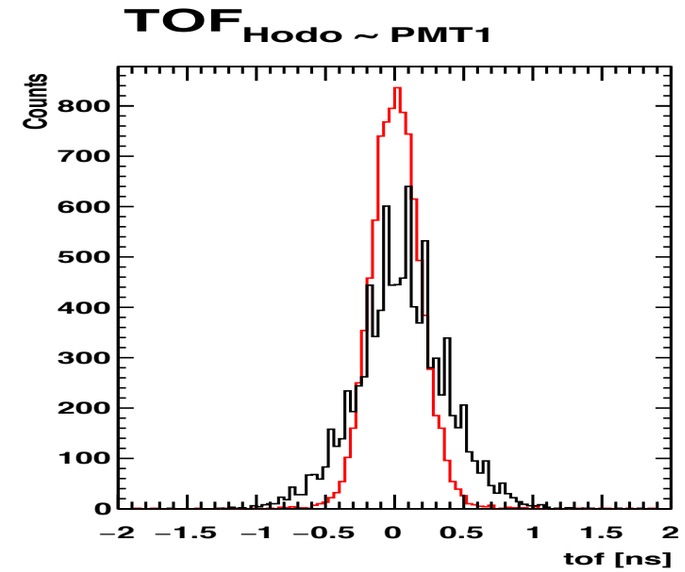

Time-of-flight distributions

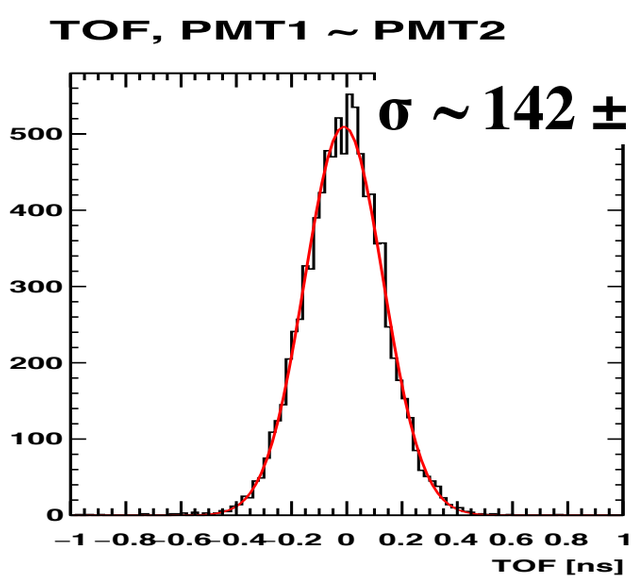

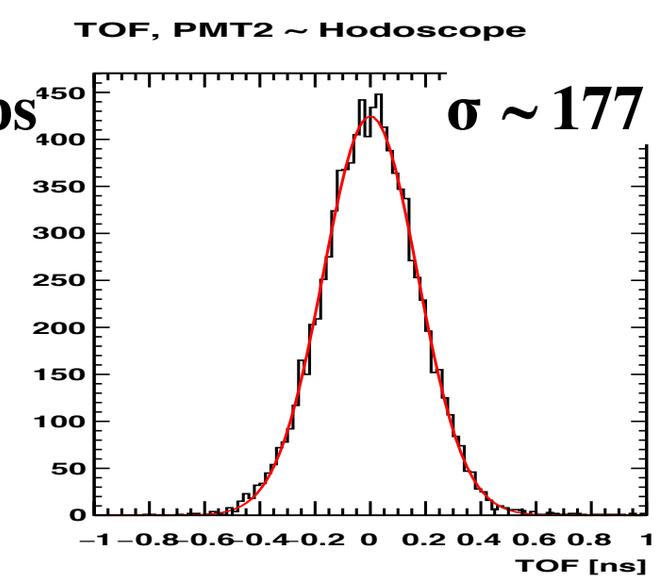

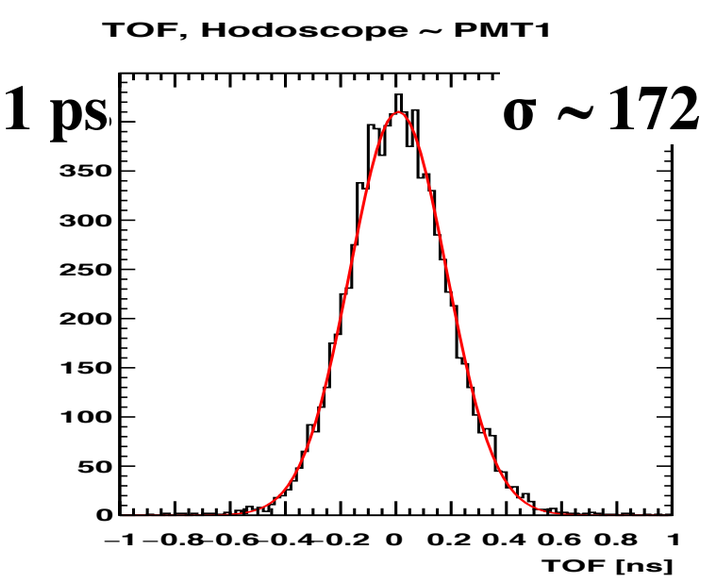

TPC Hodoscope's $\underline{\sigma_T \sim 140 \pm 1\ \text{ps}}$ (~ 2 MeV MIP)

OPTIMIZATION STUDIES

Bias voltage dependence

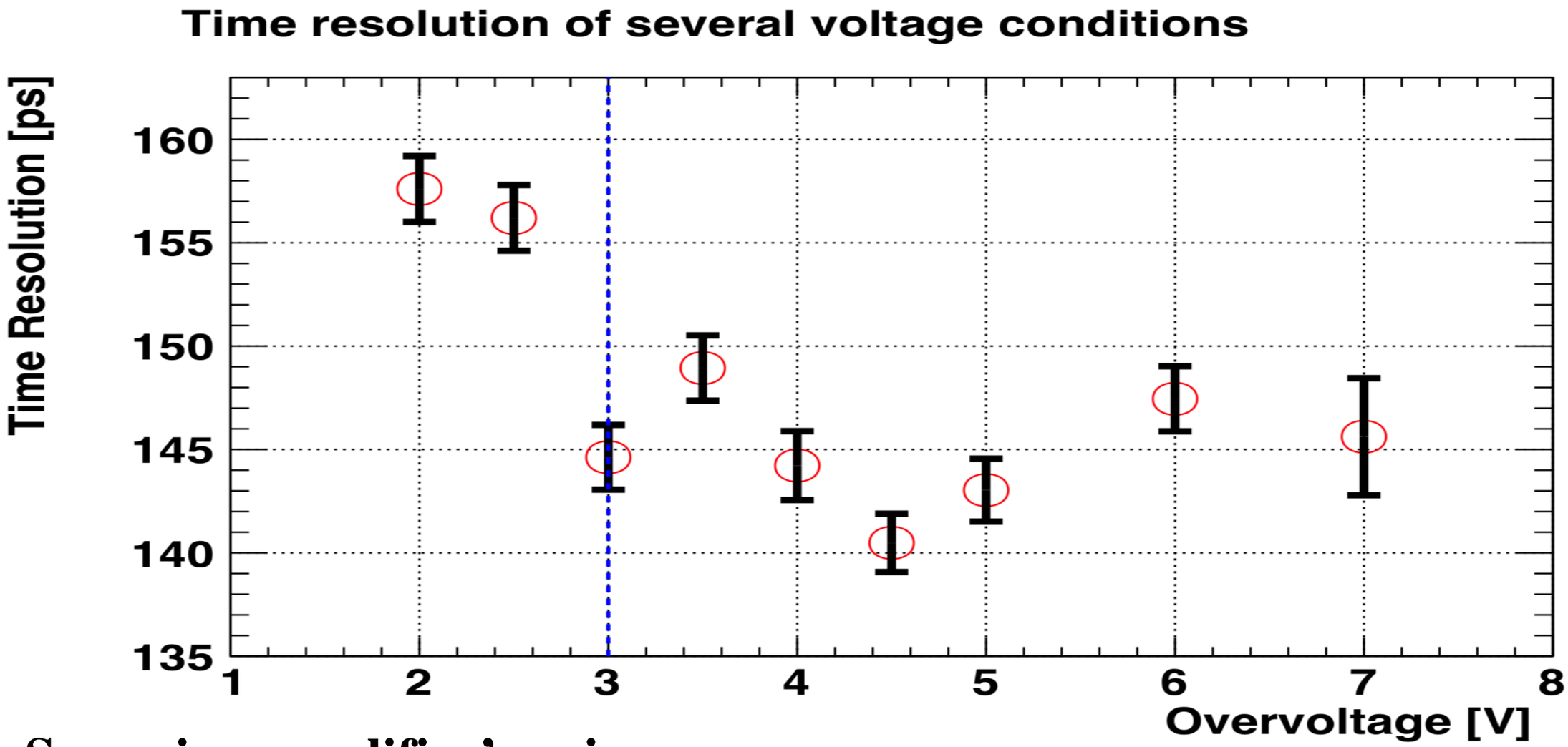

Summing-amplifier's gain

amplification	X1 (default)	X2	X4
Time resolution	140 ± 1 ps	142 ± 2 ps	152 ± 1 ps

SUMMARY

- **We developed an 80 cm long counter with 140 time resolution using MPPCs.**
- **New attempts have been made to improve time resolution.**

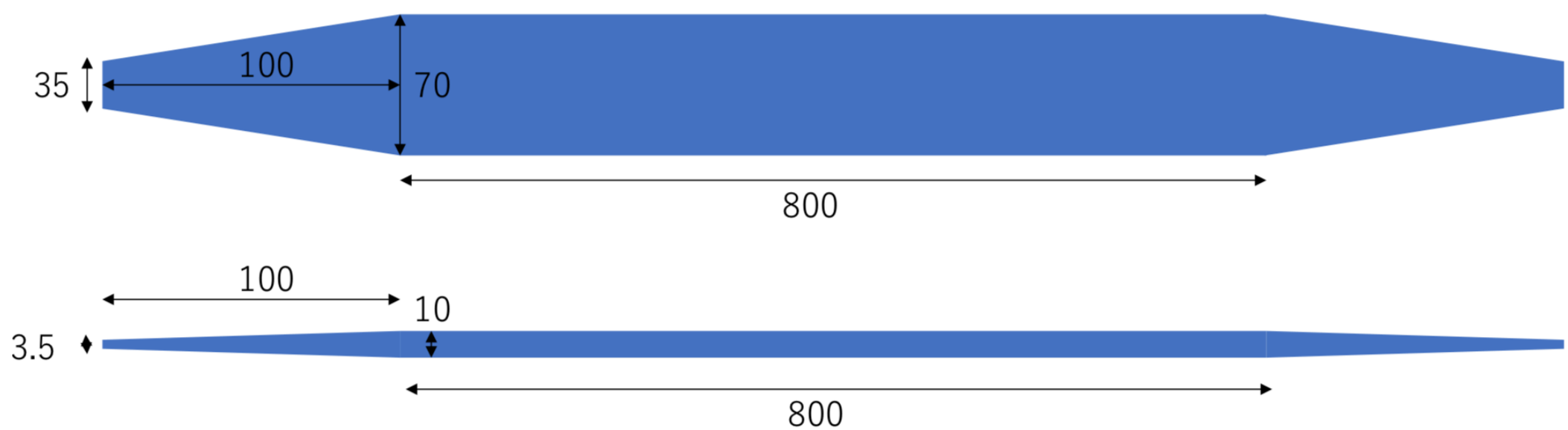

BACKUP

EJ-200

PROPERTIES	EJ-200	EJ-204	EJ-208	EJ-212
Light Output (% Anthracene)	64	68	60	65
Scintillation Efficiency (photons/1 MeV e^-)	10,000	10,400	9,200	10,000
Wavelength of Maximum Emission (nm)	425	408	435	423
Light Attenuation Length (cm)	380	160	400	250
Rise Time (ns)	0.9	0.7	1.0	0.9
Decay Time (ns)	2.1	1.8	3.3	2.4
Pulse Width, FWHM (ns)	2.5	2.2	4.2	2.7
No. of H Atoms per cm^3 ($x10^{22}$)	5.17	5.15	5.17	5.17
No. of C Atoms per cm^3 ($x10^{22}$)	4.69	4.68	4.69	4.69
No. of Electrons per cm^3 ($x10^{23}$)	3.33	3.33	3.33	3.33
Density (g/cm^3)	1.023	1.023	1.023	1.023
Polymer Base	Polyvinyltoluene			
Refractive Index	1.58			
Softening Point	75°C			
Vapor Pressure	Vacuum-compatible			
Coefficient of Linear Expansion	7.8×10^{-5} below 67°C			
Light Output vs. Temperature	At 60°C, L.O. = 95% of that at 20°C No change from 20°C to -60°			
Temperature Range	-20°C to 60°C			

EJ-200

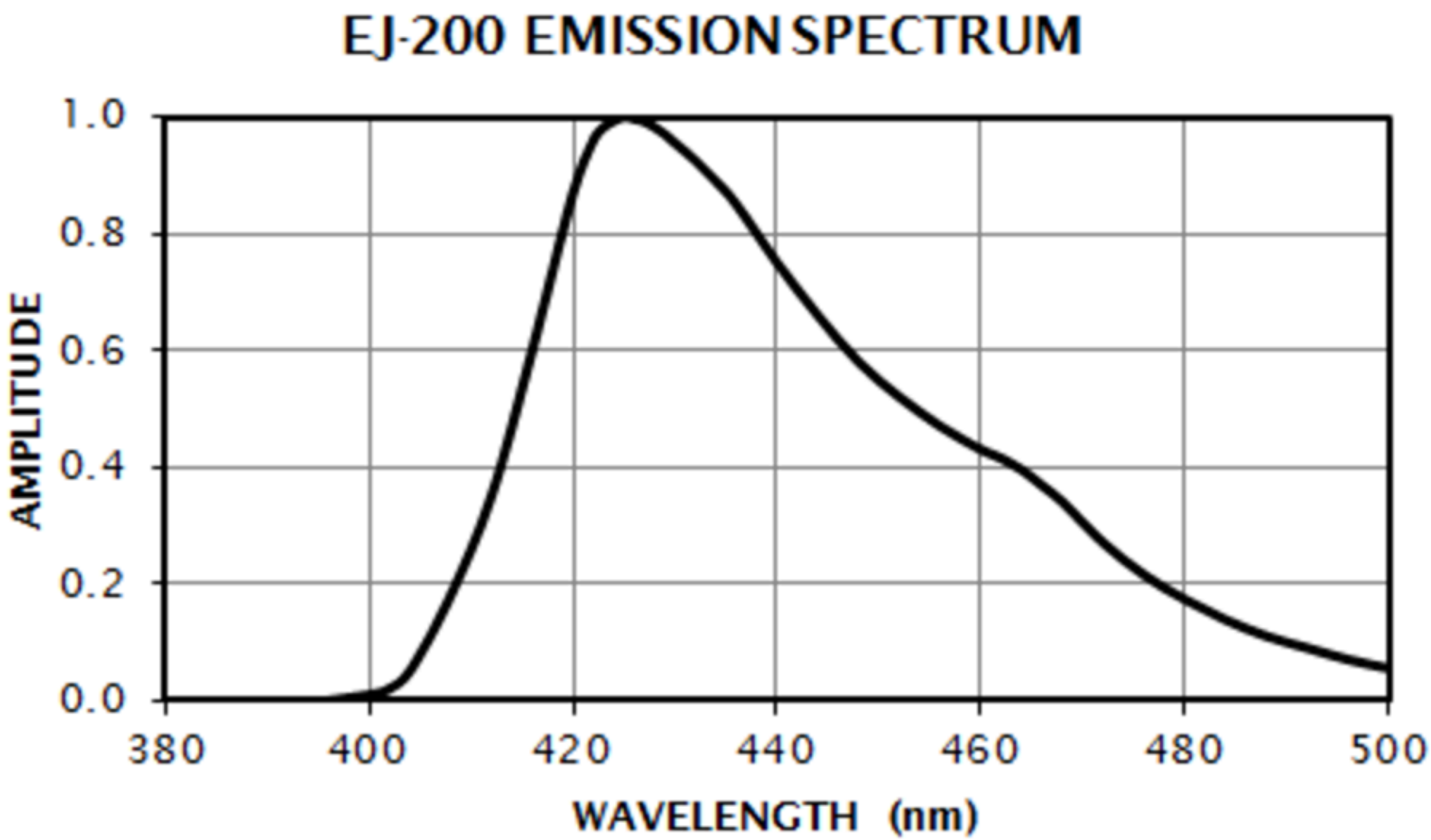
EJ-200 EMISSION SPECTRUM
AMPLITUDE
1.0
0.8
0.6
0.4
0.2
0.0
380
400
420
440
460
480
500
WAVELENGTH (nm)

MPPC

R_S : Resistance of the entire APD during a discharge
R_Q :Quenching resistor
C_J : Junction capacitance

typical values
R_S ~1 k, R_Q~150 k, C_j~0.1 pf

By Kirchhof's current law

V_{BIAS}-Q/C_j-iR_Q=0

V_{BIAS}-V_{BR}-$(i-I)R_S$-iR_Q=0

$$\tau_r = C_j \frac{(R_S R_Q)}{(R_S+R_Q)} \sim C_j R_S \ (\because R_Q \gg R_S)$$

$$i = \frac{V_{BIAS}-V_{BR}}{R_S+R_Q}(1-e^{-t/\tau_r}) \sim \frac{V_{BIAS}-V_{BR}}{R_Q}(1-e^{-t/\tau_r})$$

$$\tau_r = C_j R_Q$$

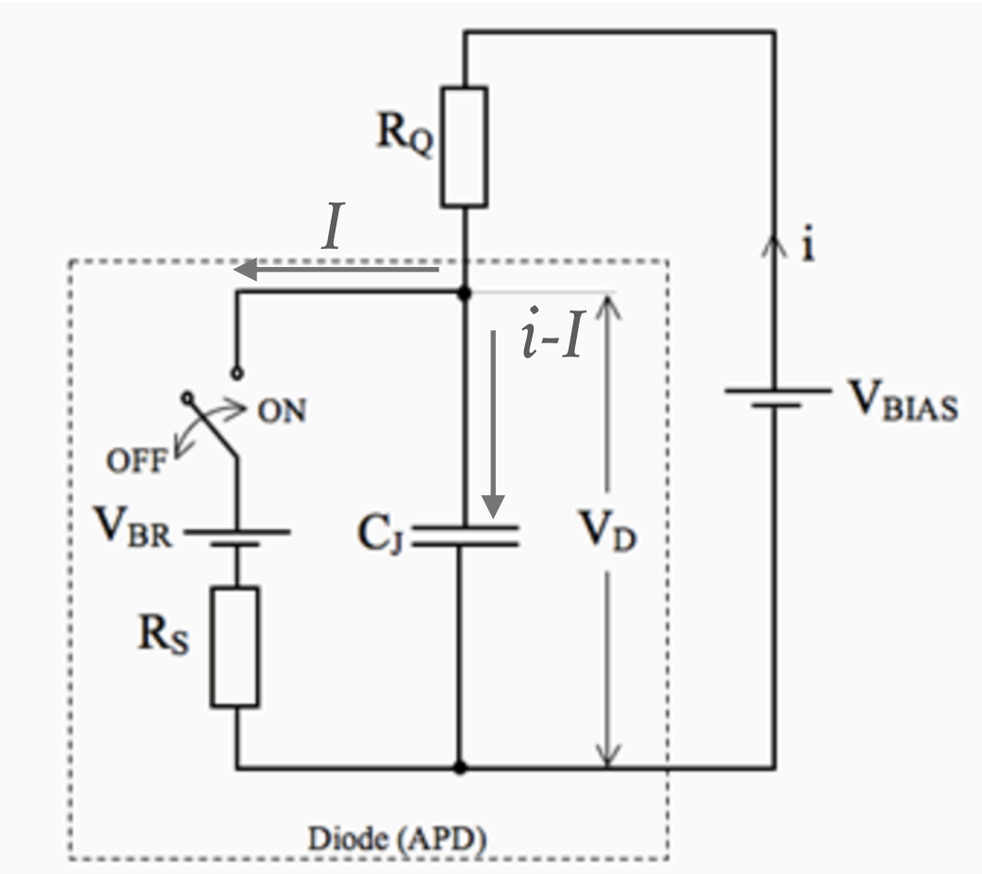

Equivalent circuit of MPPC's single GAPD

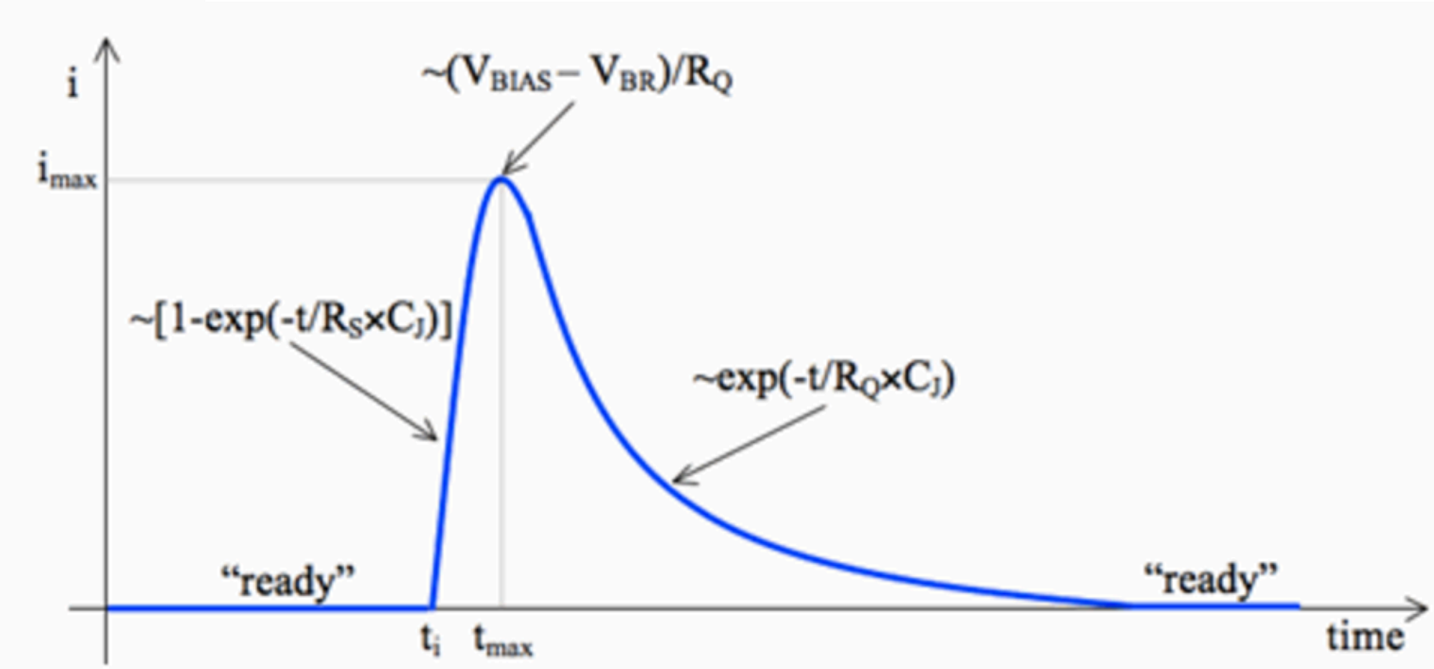

Current flowing through the APD as a function of time

MPPC

HAMAMATSU S13360-3050CS (3 x 3 mm²)

$V_{op} = V_{br}(51\ V) + 3.0\ V$ (V_{br} : breakdown voltage)

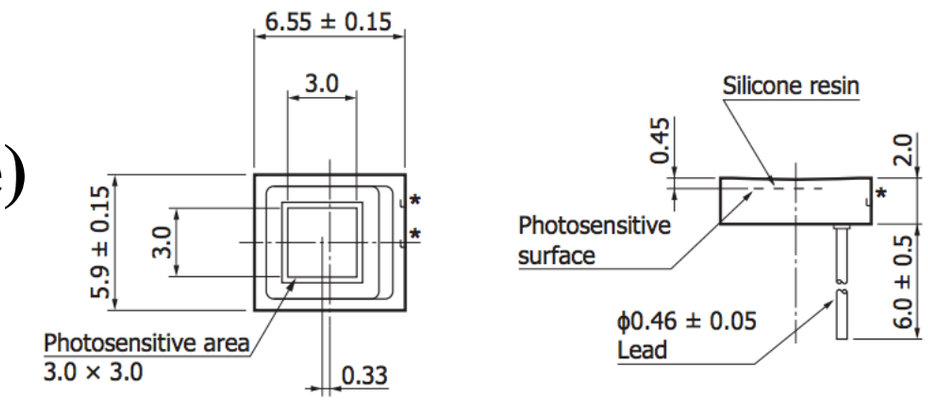

DATA SHEET

Type no.	Measure-ment conditions	Spectral response range λ (nm)	Peak sensitivity wavelength λp (nm)	Photon detection efficiency PDE*4 λ=λp (%)	Dark count*5 Typ. (kcps)	Dark count*5 Max. (kcps)	Terminal capaci-tance Ct (pF)	Gain M	Break-down voltage VBR (V)	Crosstalk probability (%)	Recom-mended operating voltage Vop (V)	Tem-perature coefficient at recom-mended operating voltage ΔTVop (mV/°C)
S13360-3050CS	Vover =3 V	270 to 900	450	40	500	1500	320	1.7×10^6	53 ± 5	3	VBR + 3	54
S13360-3050PE		320 to 900										

Type no.	Pixel pitch (μm)	Effective photosensitive area (mm)	Number of pixels	Package	Fill factor (%)
S13360-3050CS	50	3.0 × 3.0	3600	Ceramic	74
S13360-3050PE				Surface mount type	

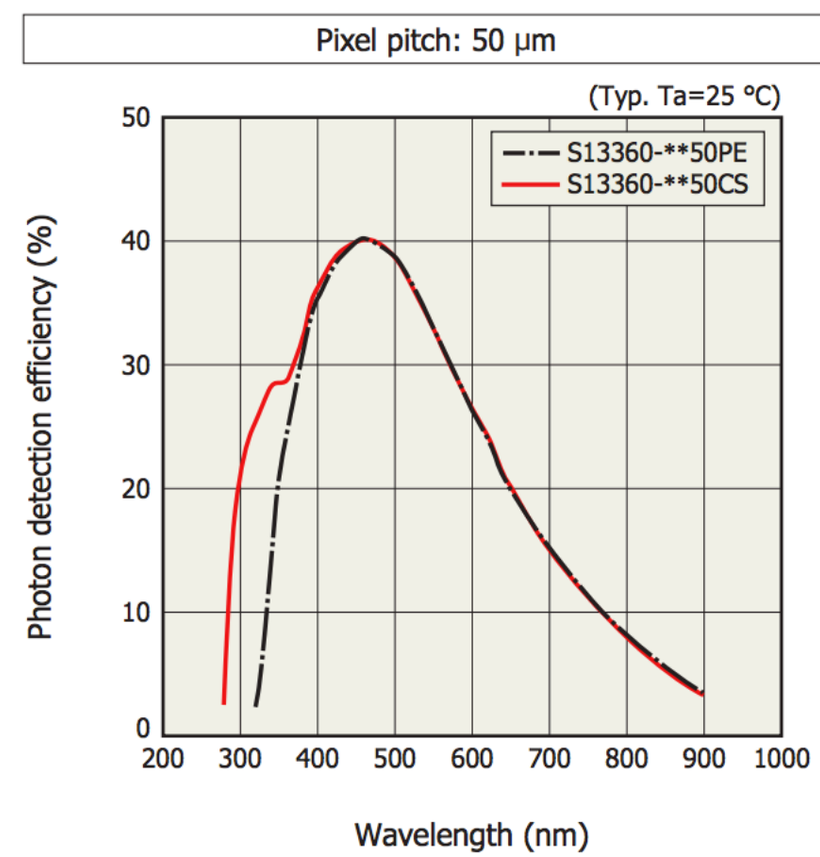

TIME RESOLUTION DEPENDENCE ON THE NUMBER OF MPPC (PROTOTYPE TEST)

NPE : Time Resolution $\sigma^2 = a^2 + (b/npe)^2$

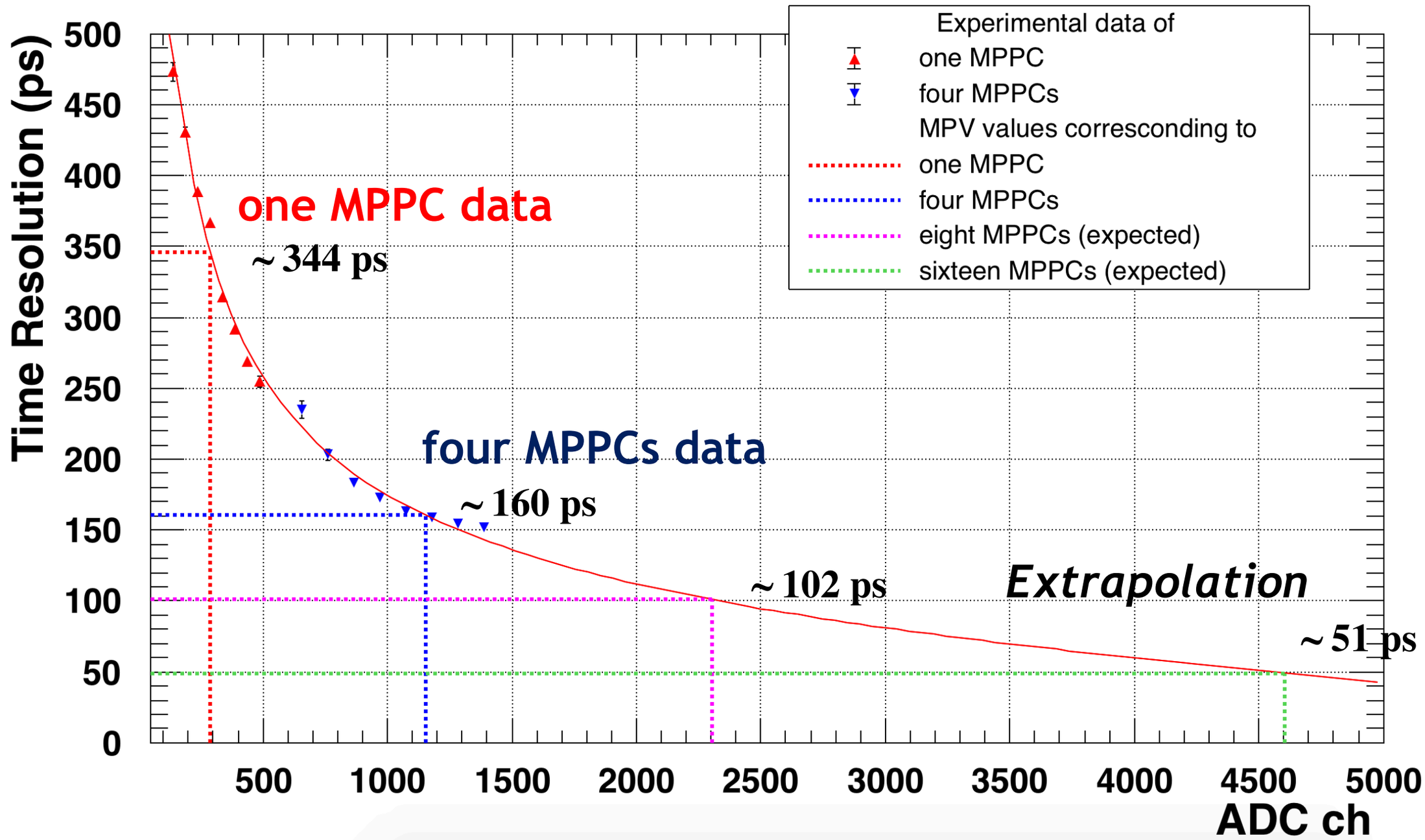

CIRCUIT DIAGRAM

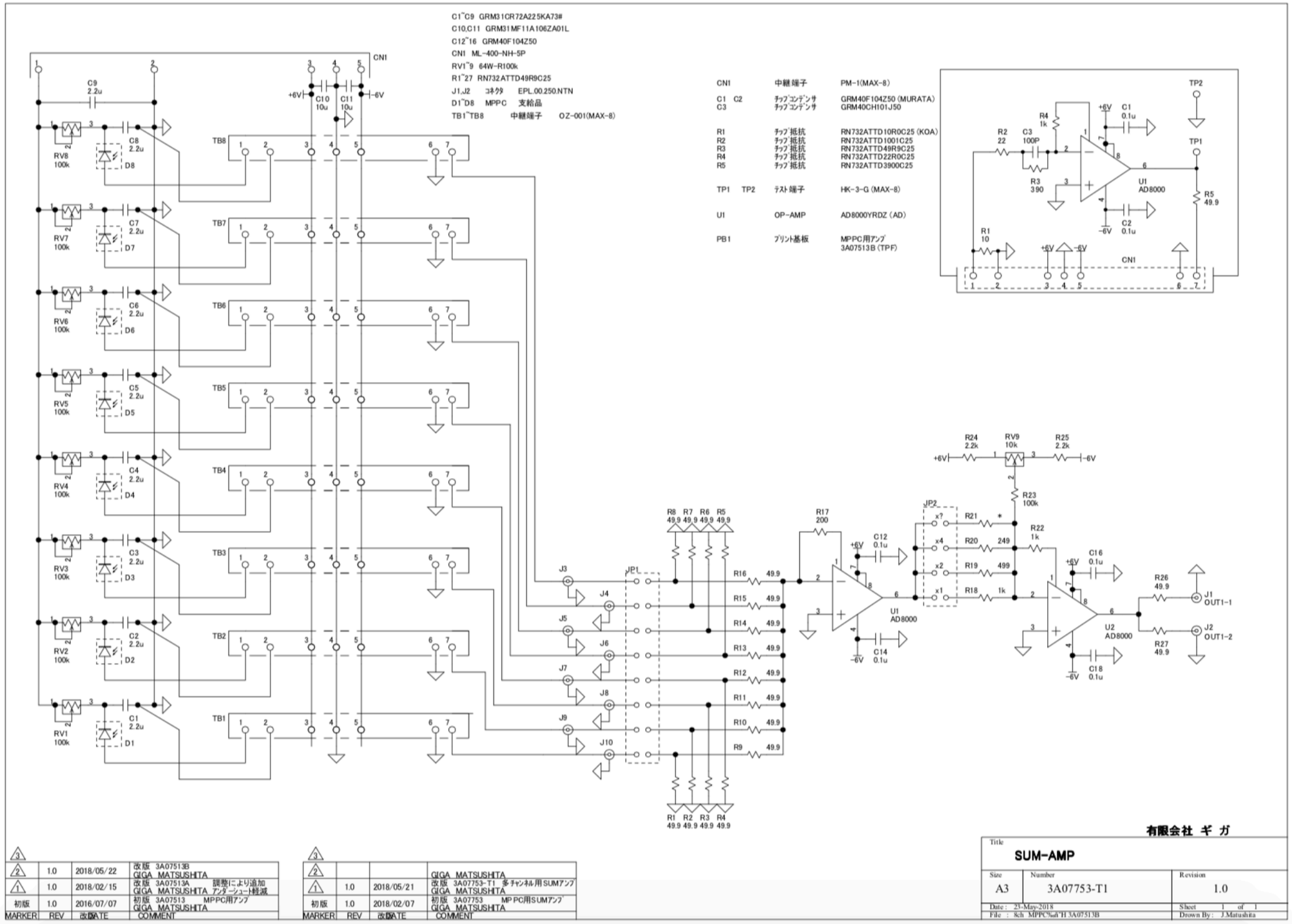

CIRCUIT DIAGRAM

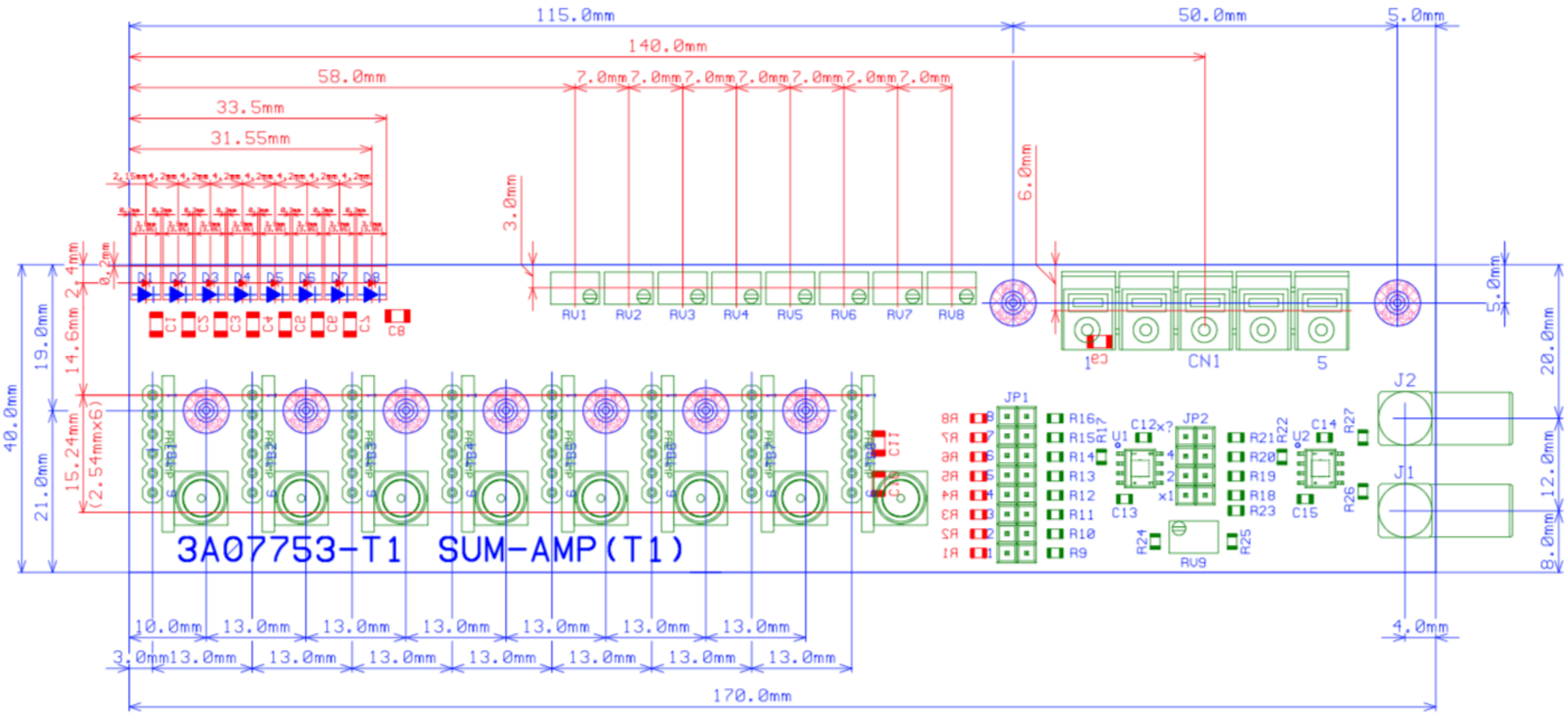

EVENT SELECTION

In the position distribution, selected the 8 cm section of the both triggers.

(Red histograms of the selected event)

Bottom trigger **Top trigger** **Hodoscope**