SiPM readout for cryogenic applications

5th International Workshop on New Photon-Detectors
November 27th – 29th 2018, University of Tokyo

Alessandro Razeto -- Laboratori Nazionali del Gran Sasso

Cryogenic applications

- Several particle detectors use liquified noble gasses as target
  - LXe = 165 K -- LAr = 87 K -- LNe = 27 K
  - Liquified noble gasses shows
    - Very high light yield O(10 pe/keV)
    - Very high electron livetime O(10 ms)
- Beam experiments:
  - Neutrino Long and Short baseline experiments at FNAL: DUNE/ICARUS
  - MEG/MEG-II
- Low Background experiments:
  - Dark Matter detectors: DarkSide-20k, Xenon-nT
  - Double beta detectors: NEXO

Cryogenic read-out

- SiPMs are working down to the freeze-out at ~ 25 K
  - Their compact size and no HV simplify the design of new detectors
  - High PDE and high granularity offers uncharted possibilies for segmented detectors (CALOCUBE)
    - On the other hand for large detectors the small size of SiPMs compared to PMTs is a problem

- The cryogenic read-out poses a number of problems
  - Optimize connection schemes
  - Development of cryo-electronics
    - Number of signal extractions
    - Dissipated power
    - Radiopurity of components and circuits

SiPMS

SiPMs at cryogenic temperature

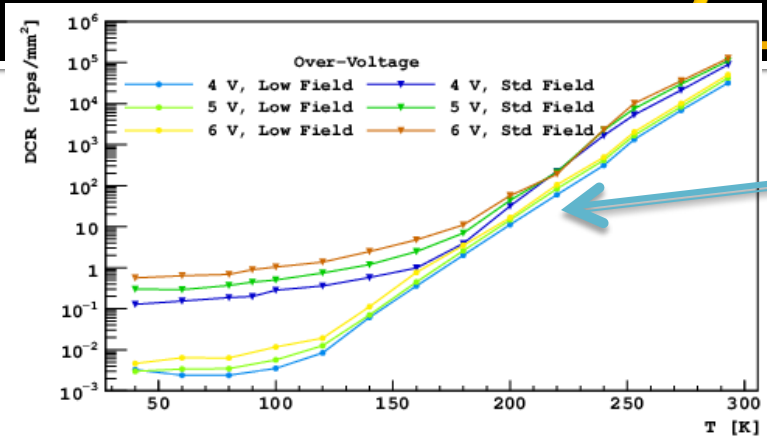

- Dark noise reduction by more than 7 orders of magnitude

SiPMs at cryogenic temperature

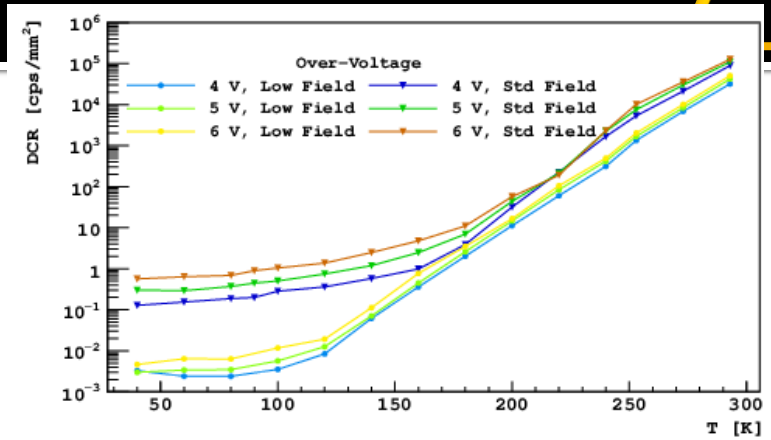

- Dark noise reduction by more than 7 orders of magnitude
- Increased afterpulse
  - Lower gain operation

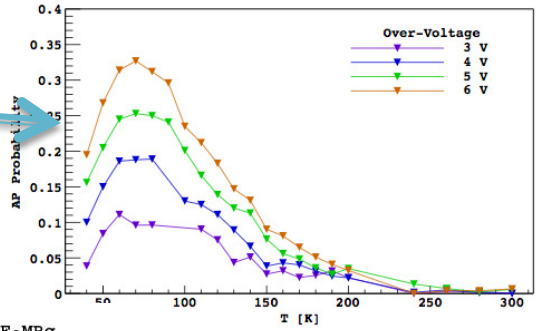

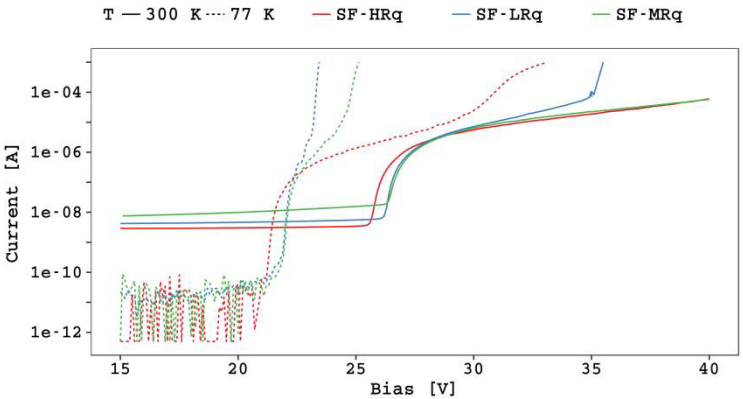

At a given temperature and overvoltage
higher Rq -> longer recharge time
-> lower triggering probability in the same cell
-> lower afterpulse probability
-> lower divergence probability

SiPMs at cryogenic temperature

PD18

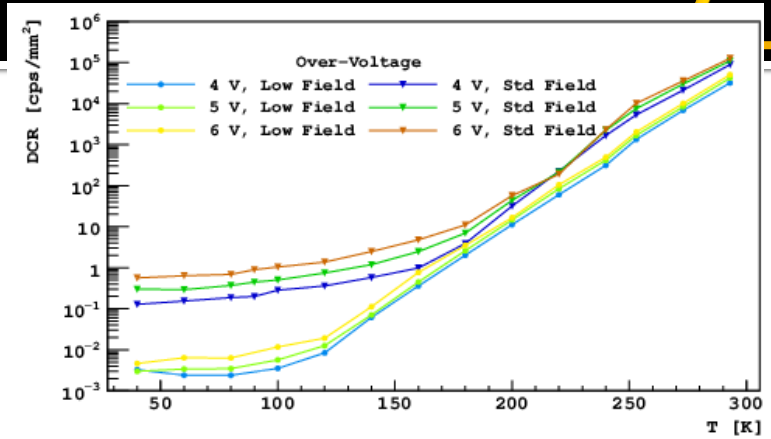

- Dark noise reduction by more than 7 orders of magnitude

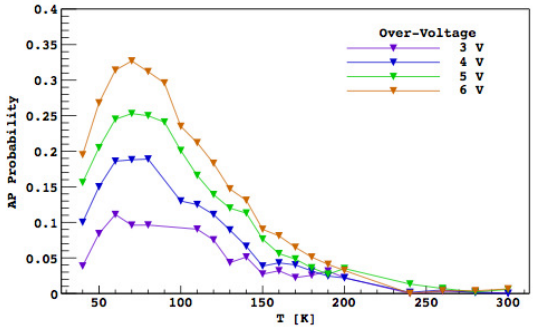

- Increased afterpulse
  - Lower gain operation
- For poly-silicon based R_q
  - R_q strongly depends on T
  - Pulse shape changes
    - longer recharge time

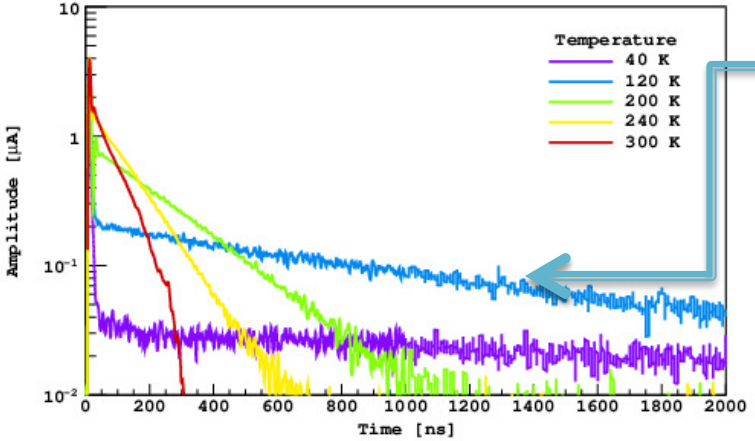

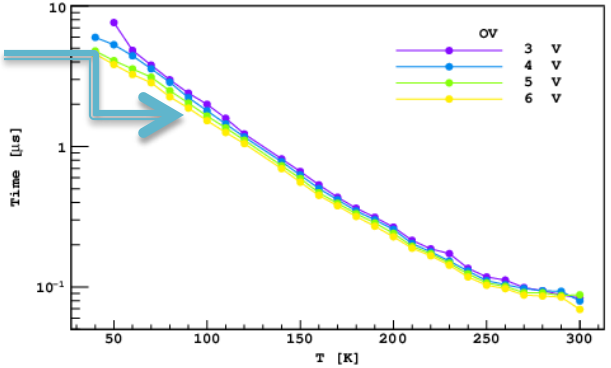

SiPMs at cryogenic temperature

PD18

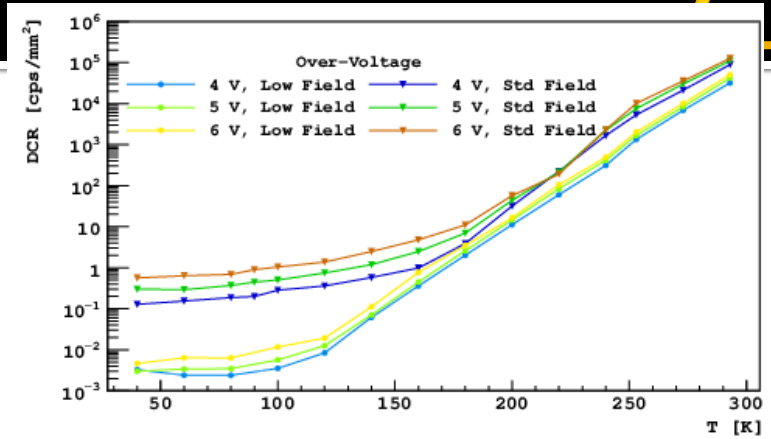

- Dark noise reduction by more than 7 orders of magnitude
- Increased afterpulse
  - Lower gain operation
- For poly-silicon based R_q
  - R_q strongly depends on T
  - Pulse shape changes
    - longer recharge time
- <u>Smaller peak current</u>

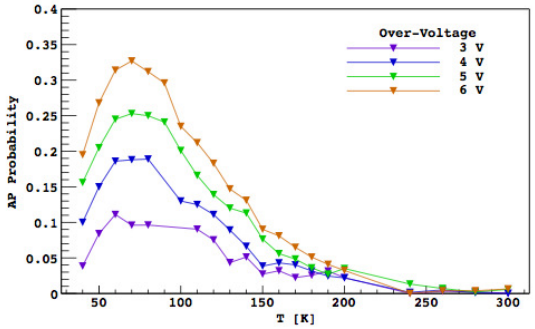

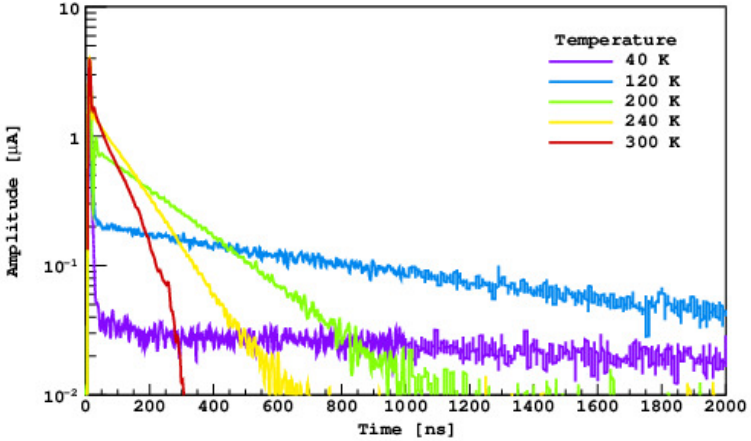

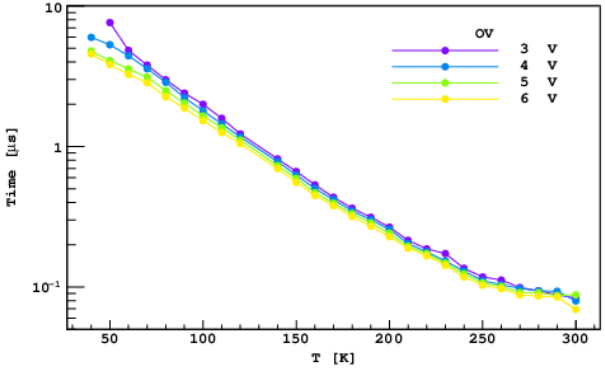

F. Acerbi et al., IEEE TED 64,2,17

FBK: Low AP SiPMs

Extended Gain SiPM for Cryogenic Application from FBK

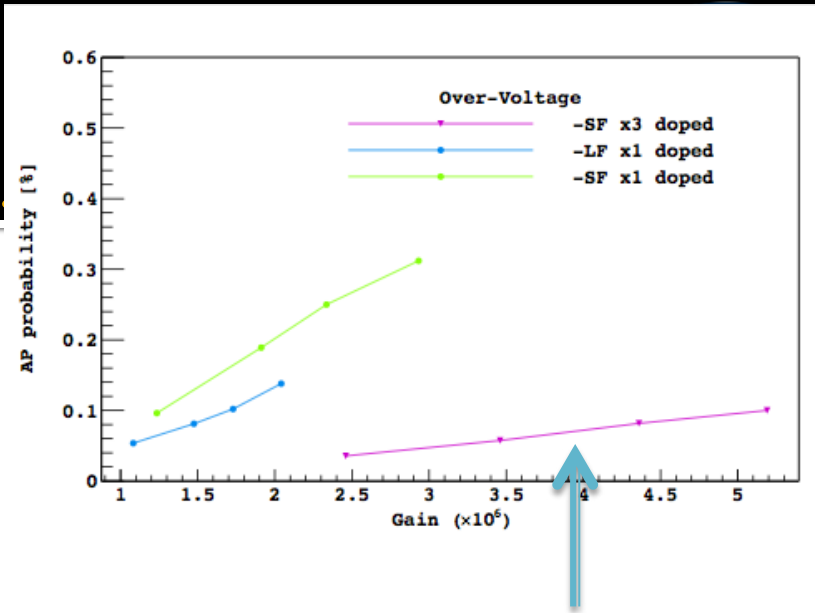

Low afterpulse

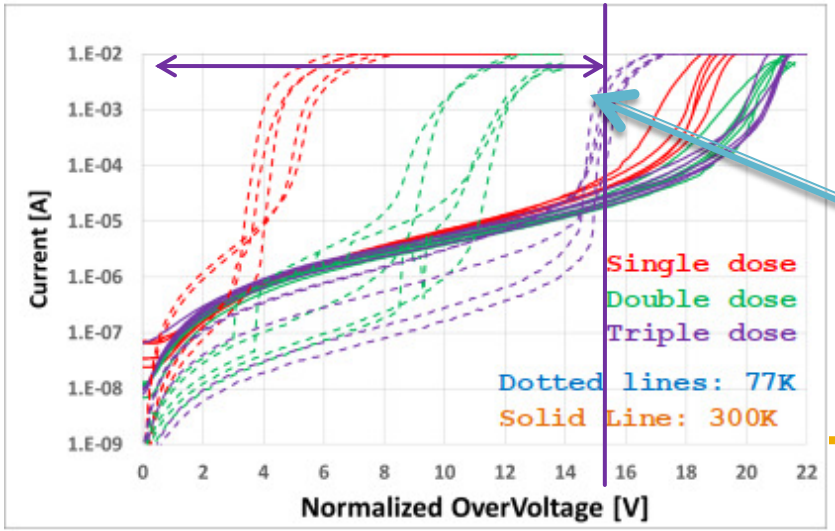

Extended Overvoltage at 77 K > 14 V

FBK: Low AP SiPMs

- The increased stability at cryogenic temperarure can be beneficial to:
  - Increse the gain
    or
  - Decrease the recharge time
    or
  - Decrease the DCR

- FBK produced several SiPM variants for DarkSide
  - Extensive tests are ongoing to best match:
    - The experiment specifications (PDE/DCR/AP/DiCT)
    - The coupling with the cryogenic FEB

DarkSide-20k
Photo Detector Module
specifications:

- Surface = 25 cm2
- PDE > 45 % @ 420 nm
- DCR = 0.08 cps/mm2
- TNC < 40%
- Noise Hits ~ DCR
- Timing ~ 10 ns

SNR > 8
BW ~ 30 MHz

- Dynamic range > 50 pe
- Total power < 250 mW

FBK: Low AP run split

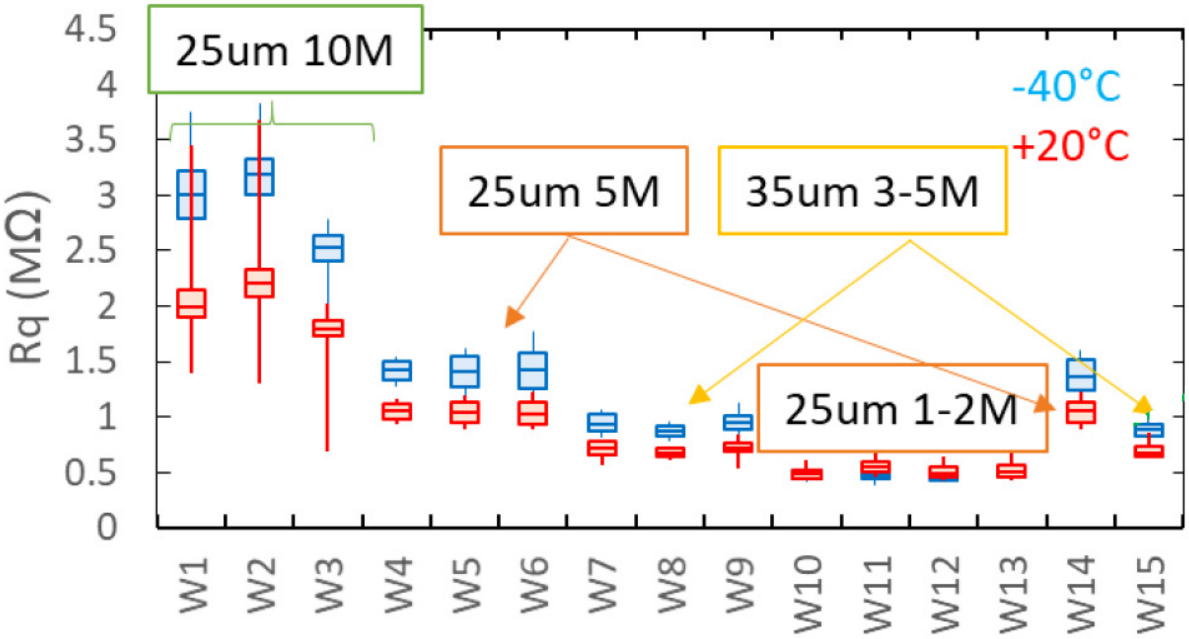

Fast recharge time

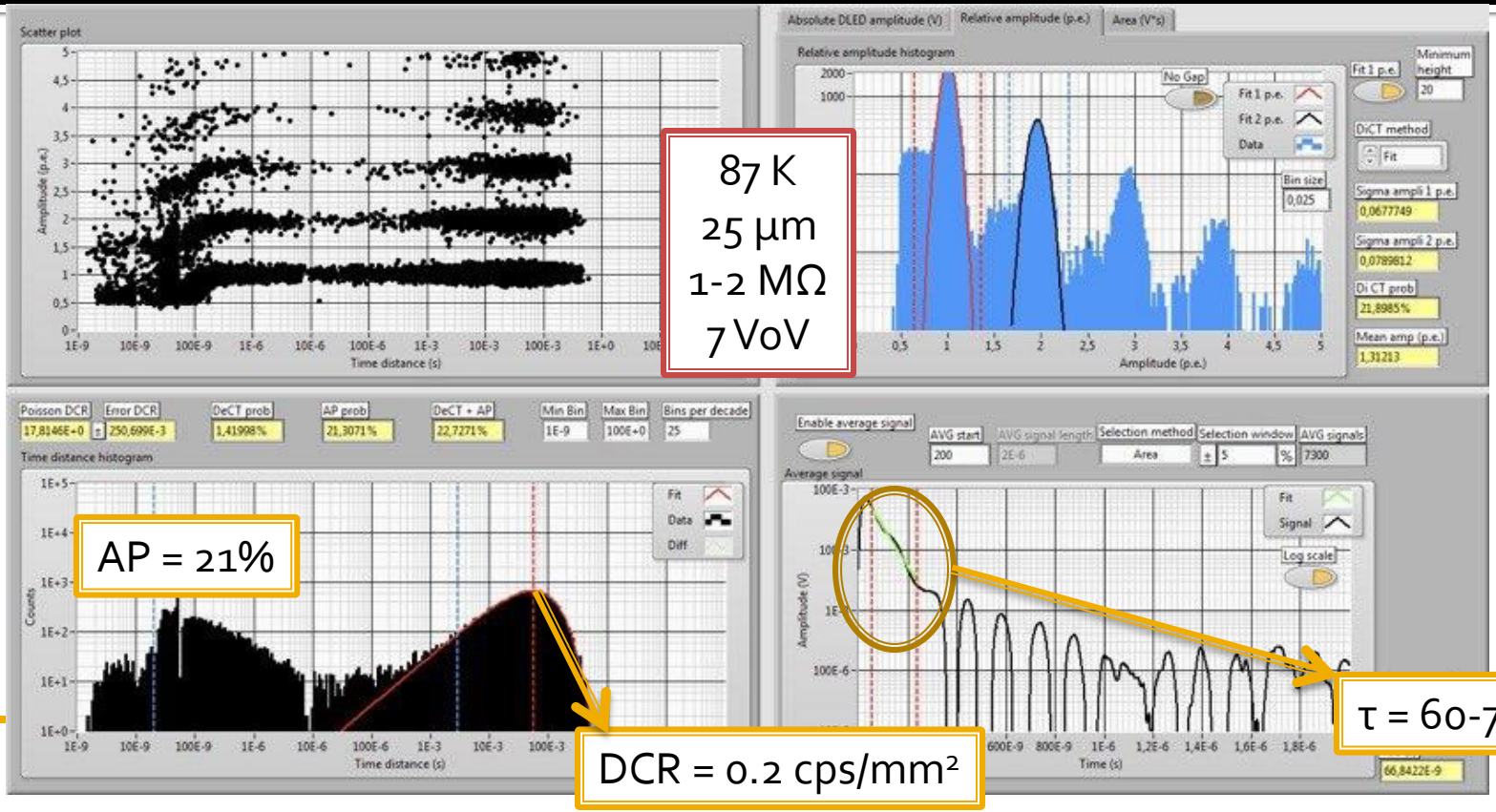

Long recharge time

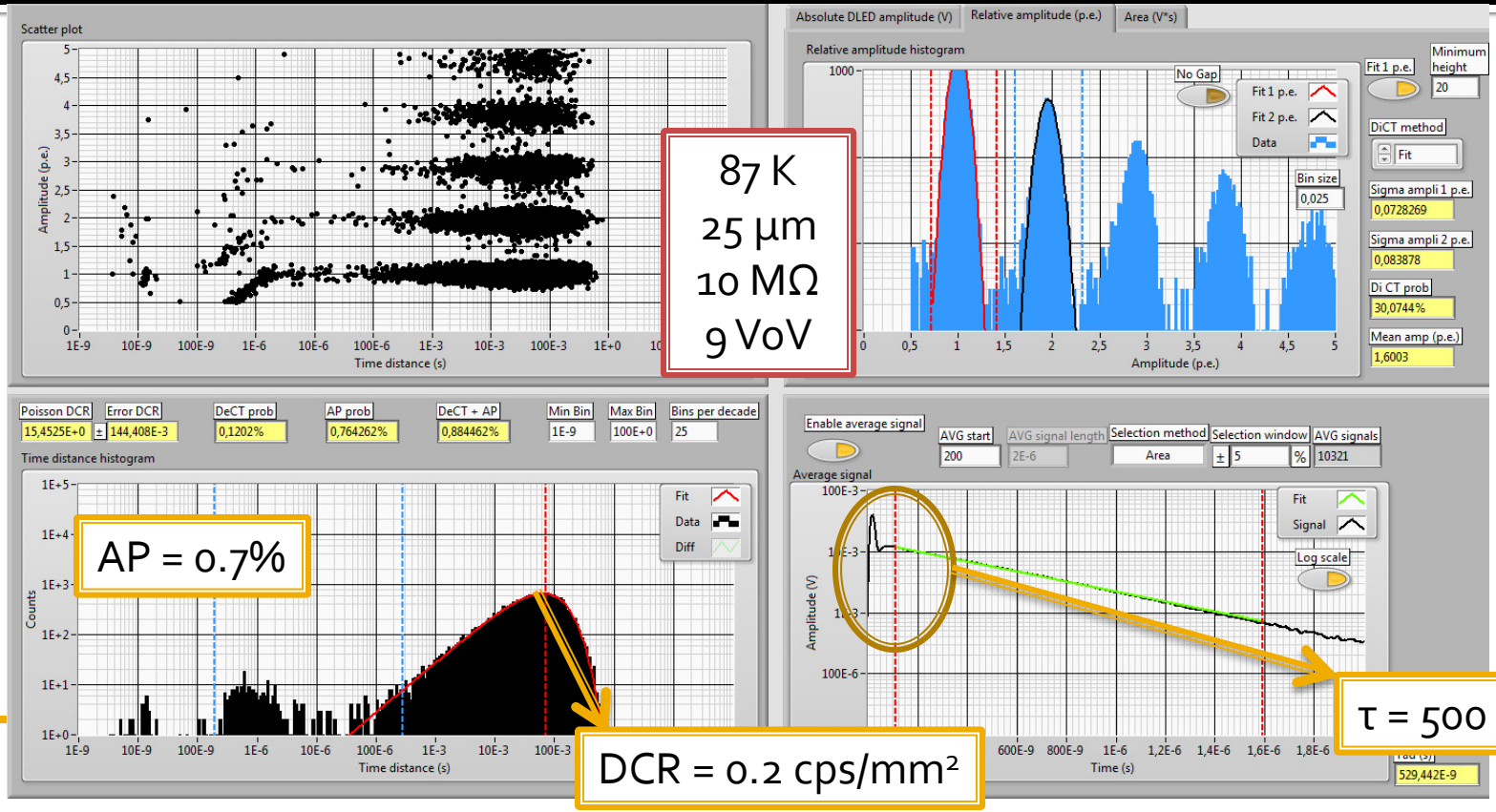

SiPM Electrical Model

SiPM detailed electrical model

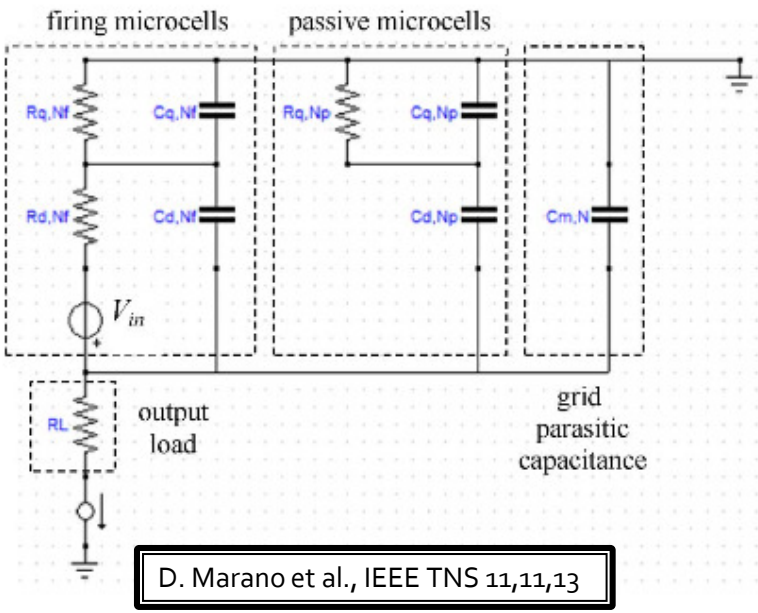

D. Marano et al., IEEE TNS 11,11,13

SiPM signal shape

SPE recharge time

$$\tau_{i2} \simeq \frac{N R_q R_L C_d^2}{Rq(C_d + C_q) + N R_L (C_d || C_q)}$$

$$\tau_{d2} \simeq Rq(C_d + C_q) + N R_L (C_d || C_q)$$

$$\tau_q := Rq(C_d + C_q) \quad \& \quad \tau_L := N R_L (C_d || C_q)$$

$$F_C := C_d / C_q$$

$$\tau_{i2} \simeq F_C (\tau_q || \tau_L)$$

$$\tau_{d2} \simeq \tau_q + \tau_L$$

SiPM detailed electrical model

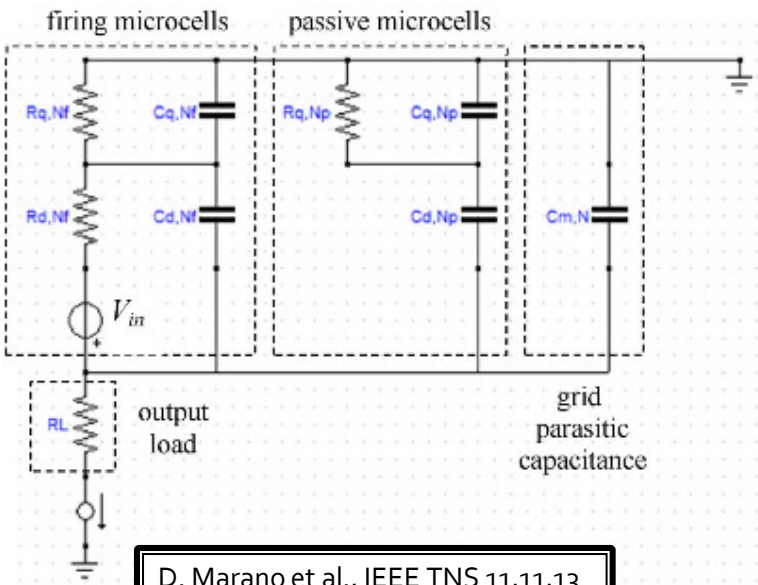

D. Marano et al., IEEE TNS 11,11,13

SiPM signal shape

SPE recharge time

$$\tau_{i2} \simeq \frac{N R_q R_L C_d^2}{Rq(C_d + C_q) + N R_L (C_d || C_q)}$$

$$\tau_{d2} \simeq Rq(C_d + C_q) + N R_L (C_d || C_q)$$

$$\tau_q := Rq(C_d + C_q) \quad \& \quad \tau_L := N R_L (C_d || C_q)$$

$$F_C := C_d / C_q$$

$$\tau_L \simeq C_{SIPM} R_L$$

$$\tau_{i2} \simeq F_C (\tau_q || \tau_L)$$

$$\tau_{d2} \simeq \tau_q + \tau_L$$

$$\frac{C_d^2}{(C_d + C_q)(C_d || C_q)} \simeq F_C$$

SiPM detailed electrical model

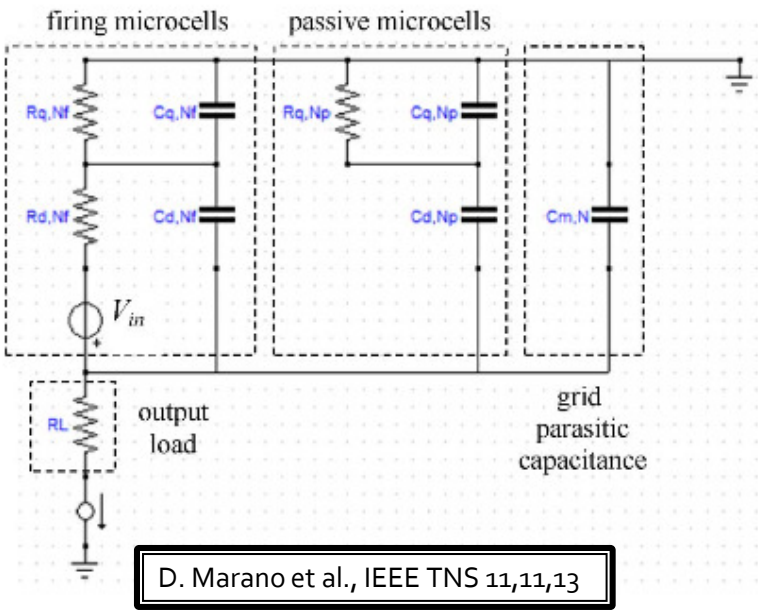

D. Marano et al., IEEE TNS 11,11,13

SPE recharge time

$$\tau_q/\tau_L \simeq \frac{F_C R_q}{N R_L} >> 1$$

$$\tau_{i2} \simeq F_C\,\tau_L$$

$$\tau_{d2} \simeq \tau_q$$

R_q ~ 1-10 MΩ
R_L ~ 10-50 Ω
N ~ 1 - 100 k
F_C ~ 5-10

The knowledge of the signal shape is important to optimize connection scheme and amplifier design

Long recharge times are preferred for charge amplifiers
Short recharge times are preferred for trans-impedance amplifiers

SiPM Ganging: MEG-II

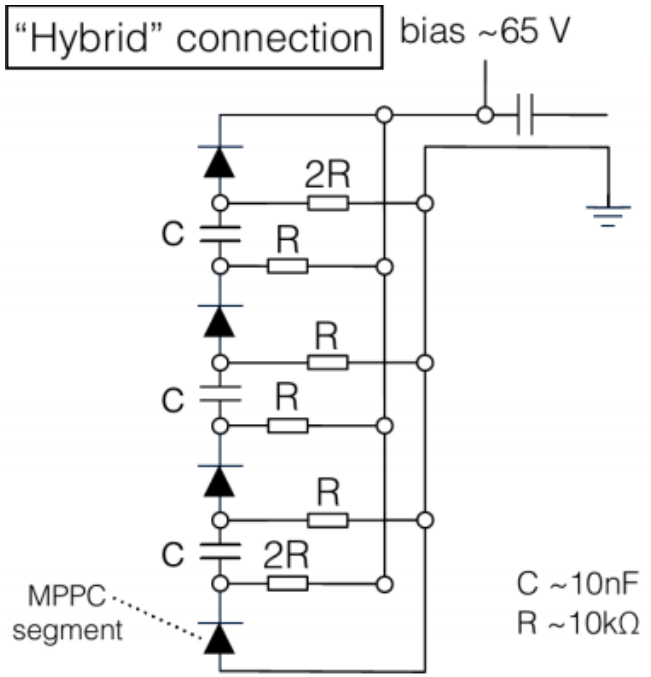

- **SiPM passive ganging**
  - allows to connect more SiPMs with the same read-out channel
    - In parallel: increasing the capacitance
      or
    - In series: reducing the effective gain
- MEG-II uses a **hybrid passive ganging** mode
  - Signal in series
  - Bias in parallel
- Signal then extracted to room temperature
- This allows fast recovery time
  - Small number of channels

SiPM Ganging: MEG-II

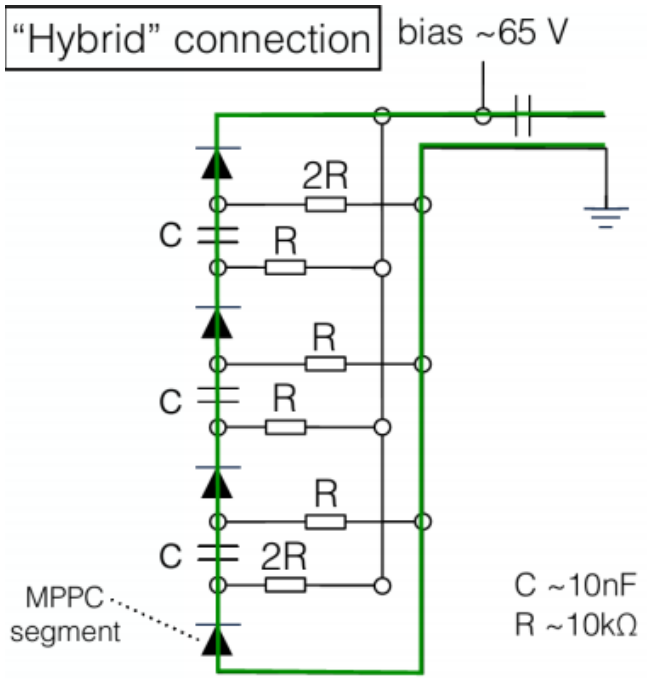

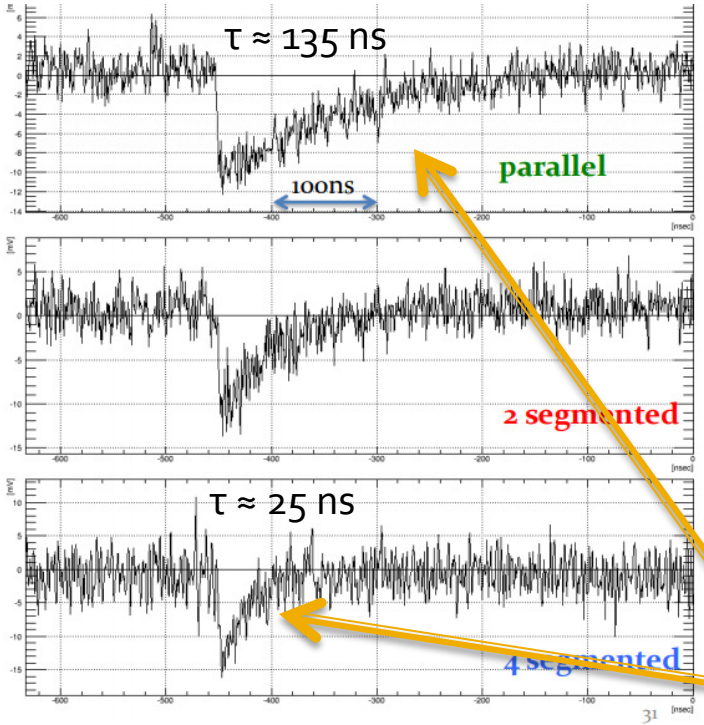

$$\tau_{i2} \simeq F_C\,\tau_L$$

$$\tau_{d2} \simeq \tau_q$$

Assuming:
N= 40k
Rq = 1 MΩ
Rs = 50 Ω
Cd = 30 fF
F = 5

τ_{d2} = 30 ns
$\tau_{i2}^{p} \approx$ 120 ns
$\tau_{i2}^{S} \approx$ 20ns

SiPM Ganging: MEG-II

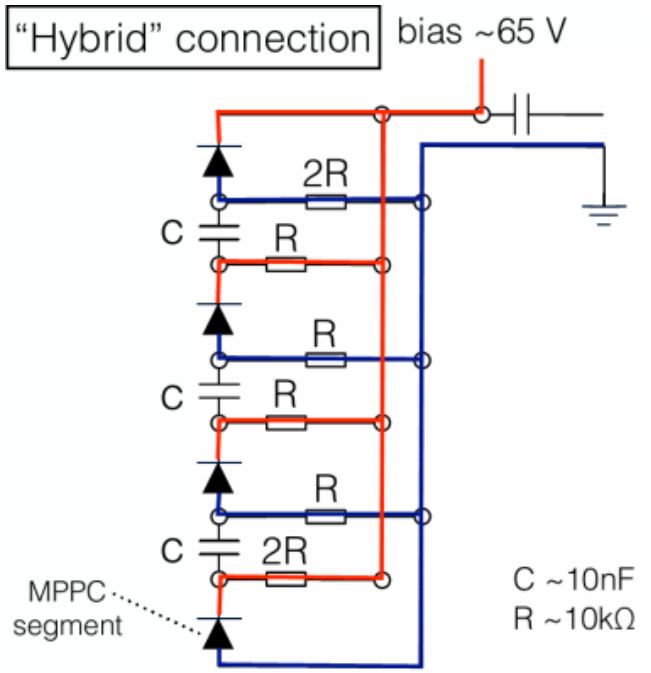

- Bias uniformity is provided by the resistor network
- Auto-balancing does not work at cryogenic temperature
  - The dark rate is too low
    - Leackage current would dominate the divider

SiPM detailed electrical model

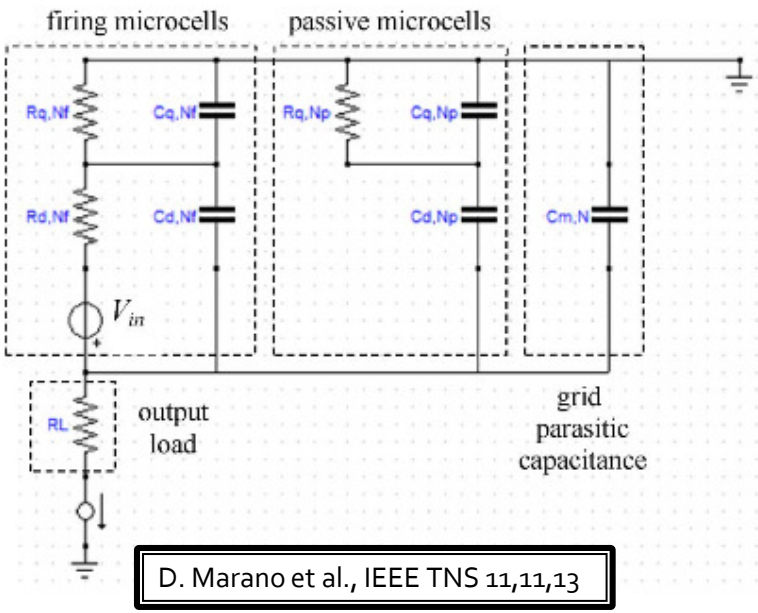

D. Marano et al., IEEE TNS 11,11,13

Static SiPM model

For FBK at 77 K:

- C_d ~ 20 – 100 fF
- Rq ~ 2 – 10 MΩ

Transition frequencies are size independent

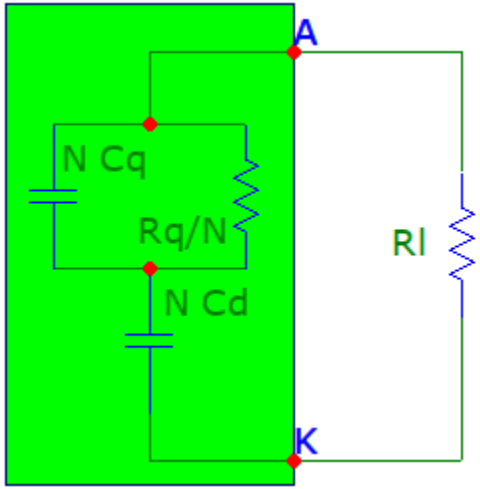

The static model defines the noise gain of the connected amplifier

C_d/R_d with impedance analyzer
FBK NUV-HD -- 1 cm² SiPM

$V = V_{BD}$

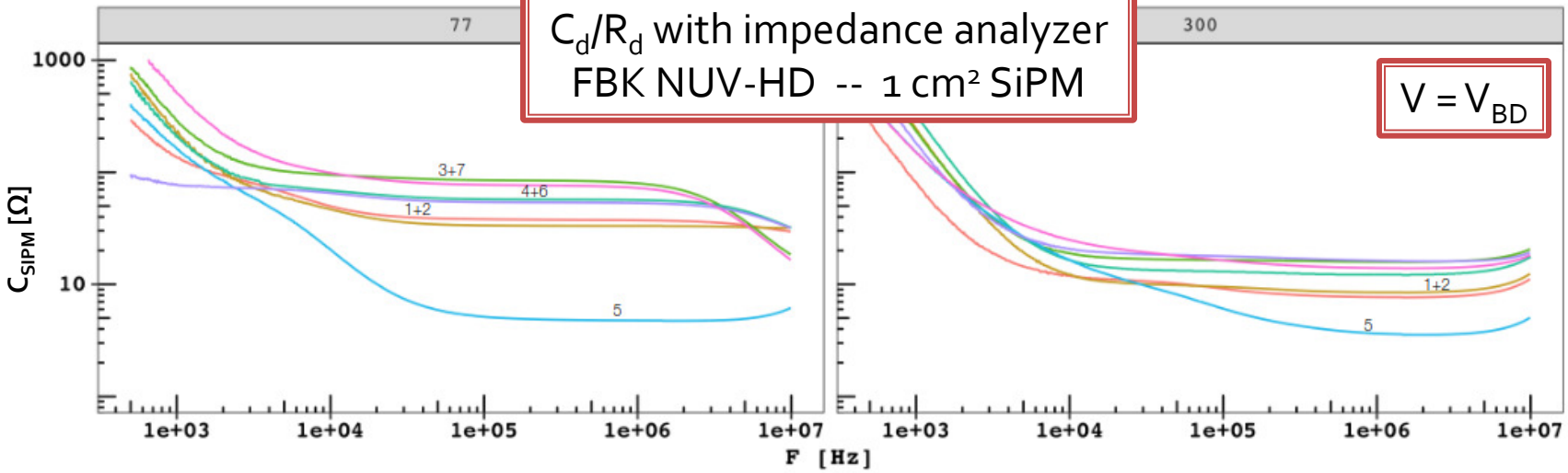

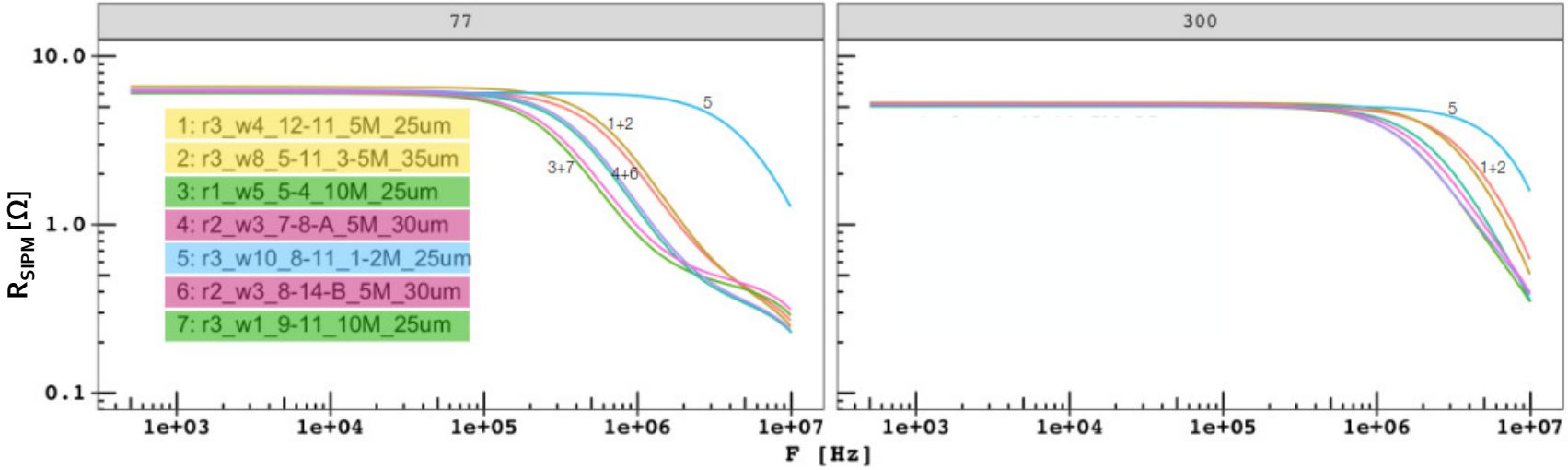

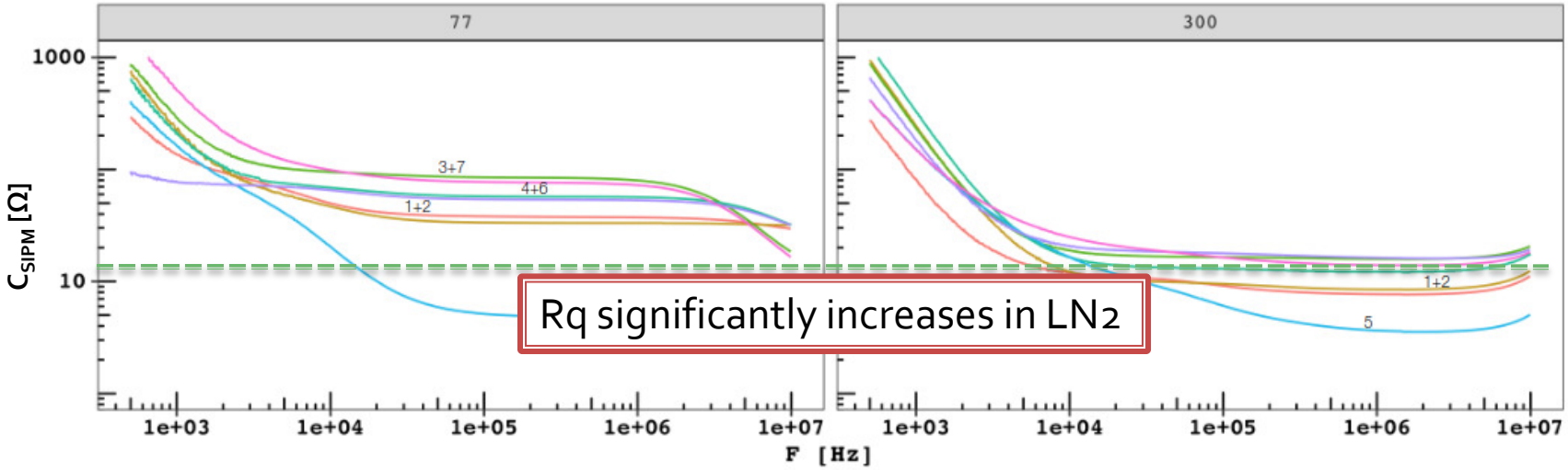

Rq significantly increases in LN2

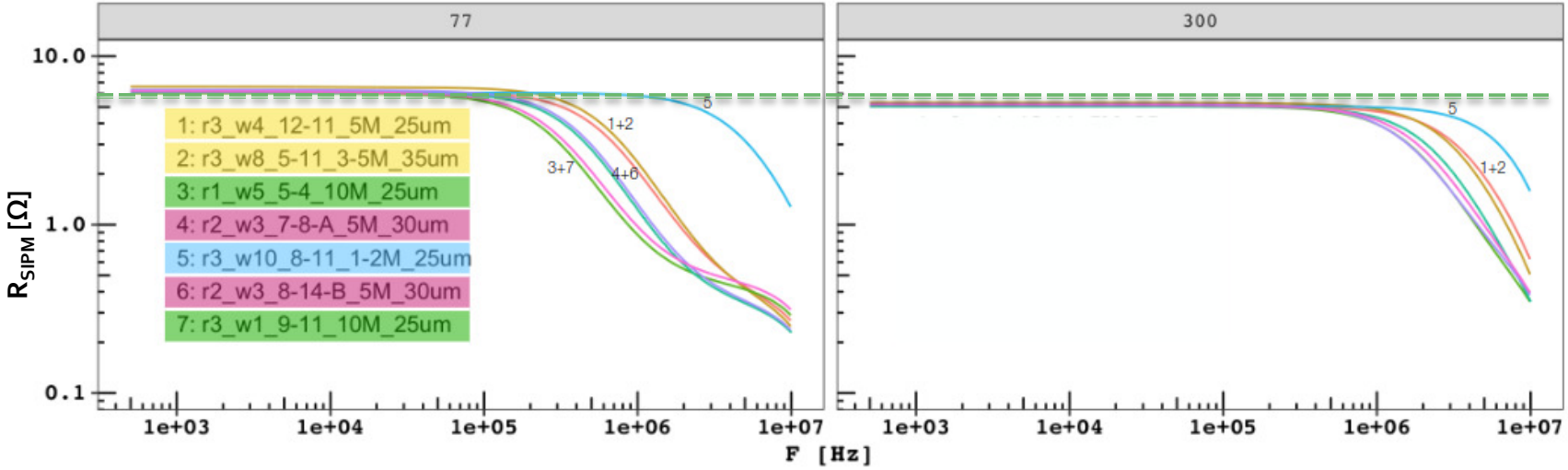

Noise Model

Noise contributions

- Several effects contribute to the noise budget
  - The thermal noise of the resistors in the SiPM: $e_J = 0.1 – 0.6$ nV $\sqrt{Hz}$
  - The voltage noise of the amplifier: $e_n = 0.2 - 5$ nV $\sqrt{Hz}$
  - The current noise of the amplifier: $i_n = 0.001 – 1$ pA $\sqrt{Hz}$
- Considering a BW of 50 MHz the current noise is negligible
  - 10^6 e- in 500 ns (τ) -> current of 300 nA
  - 1 pA * $\sqrt{50}$ MHz -> noise current of 7 nA
- The voltage noises are amplified by the noise gain

Noise gain

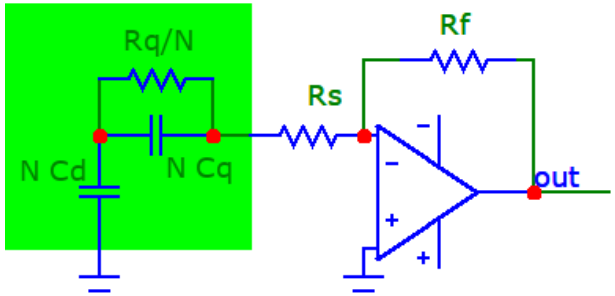

- BW & output noise spectrum depends on the SiPM static model
- 4 regions can be identified

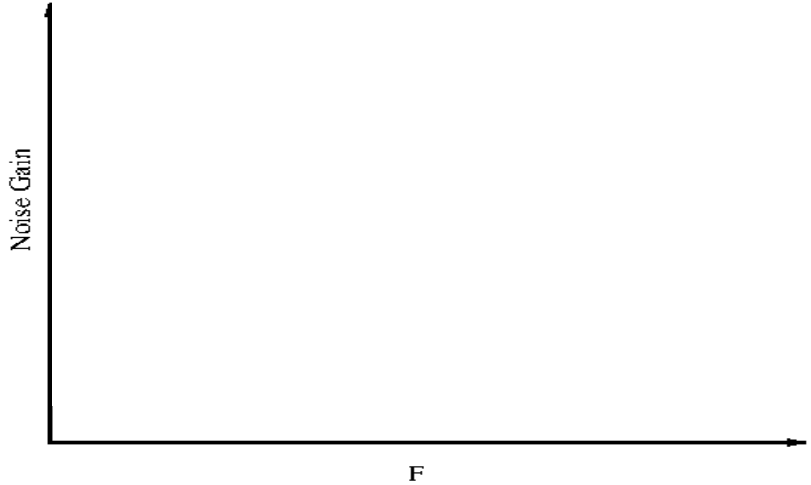

Noise gain

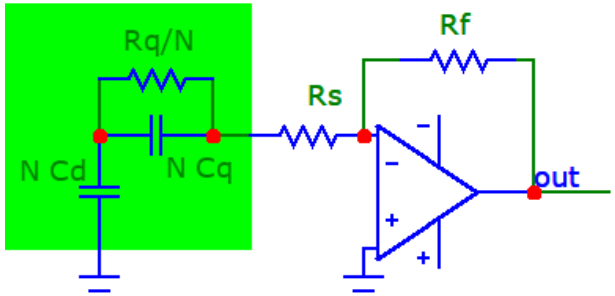

- BW & output noise spectrum depends on the SiPM static model
- 4 regions can be identified
  - F << $\frac{1}{2\pi(NR_s + R_q)C_q}$: intrinsic unamplified e_n

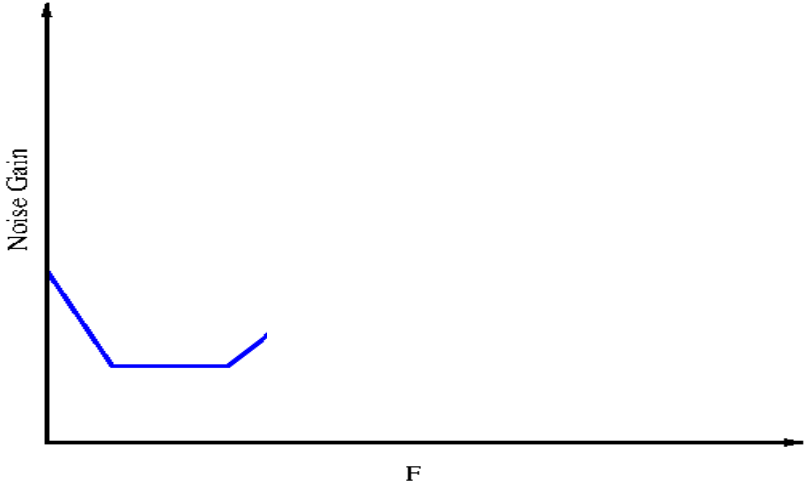

Noise gain

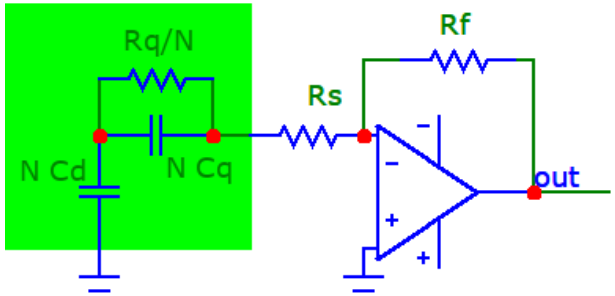

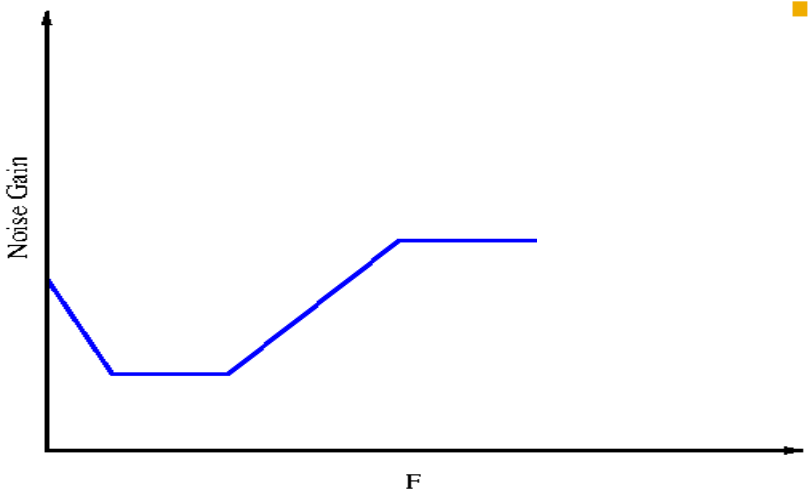

- BW & output noise spectrum depends on the SiPM static model
- 4 regions can be identified
  - F << $\frac{1}{2\pi(NR_s + R_q)C_q}$: intrinsic unamplified e_n
  - F << $\frac{1}{2\pi R_q C_q}$: $e_n + e_T$ amplified by $\frac{R_f}{R_q/N + R_s}$

Noise gain

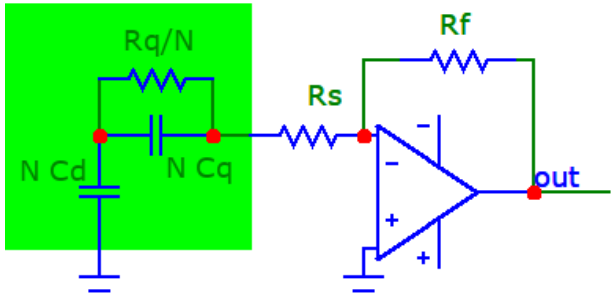

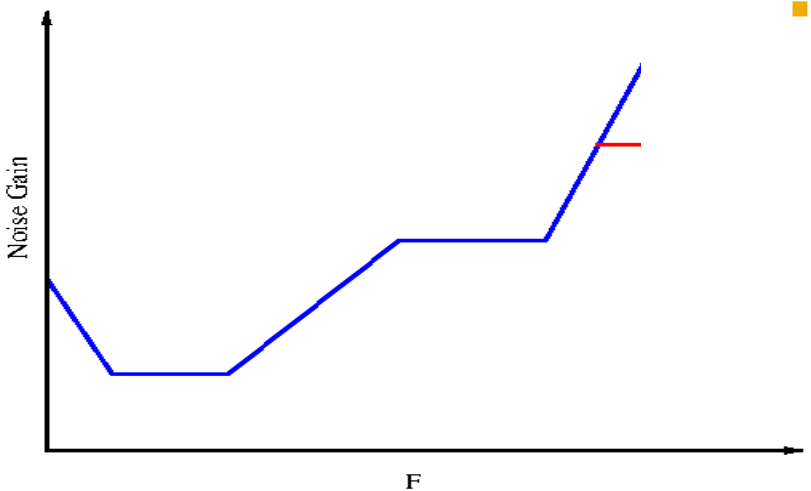

- BW & output noise spectrum depends on the SiPM static model
- 4 regions can be identified
  - F << $\frac{1}{2\pi(NR_s + R_q)C_q}$: intrinsic unamplified e_n
  - F << $\frac{1}{2\pi R_q C_q}$: $e_n + e_T$ amplified by $\frac{R_f}{R_q/N + R_s}$
  - F > $\frac{1}{2\pi R_q C_q}$: $e_n + e_T$ amplified by $\frac{R_f}{R_s}$ (if present)

Noise gain

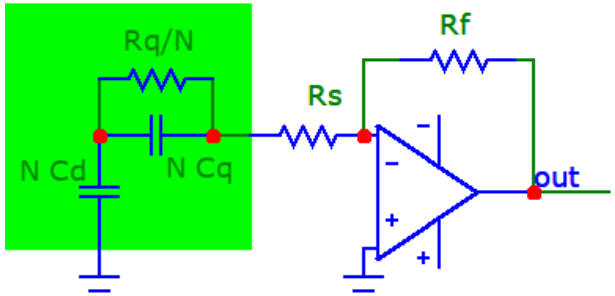

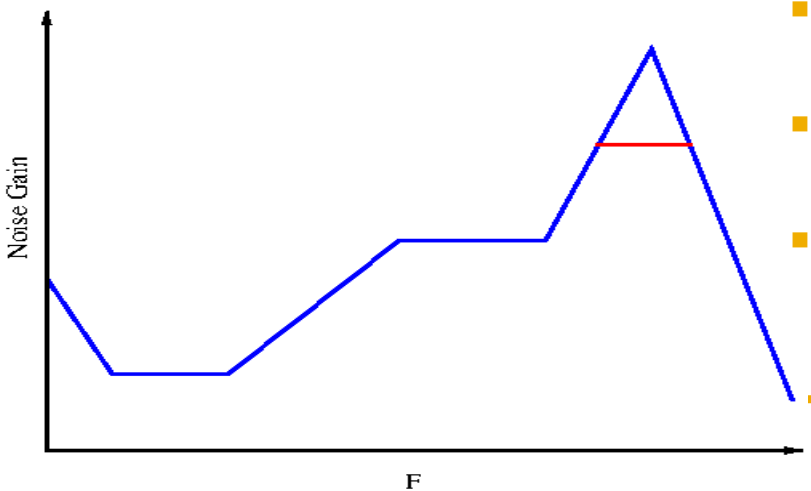

- BW & output noise spectrum depends on the SiPM static model
- 4 regions can be identified
  - F << $\frac{1}{2\pi(NR_s + R_q)C_q}$: intrinsic unamplified e_n
  - F << $\frac{1}{2\pi R_q C_q}$: $e_n + e_T$ amplified by $\frac{R_f}{R_q/N + R_s}$
  - F > $\frac{1}{2\pi R_q C_q}$: $e_n + e_T$ amplified by $\frac{R_f}{R_s}$ (if present)
  - Natural cut-off of the amplifier

Rq transition

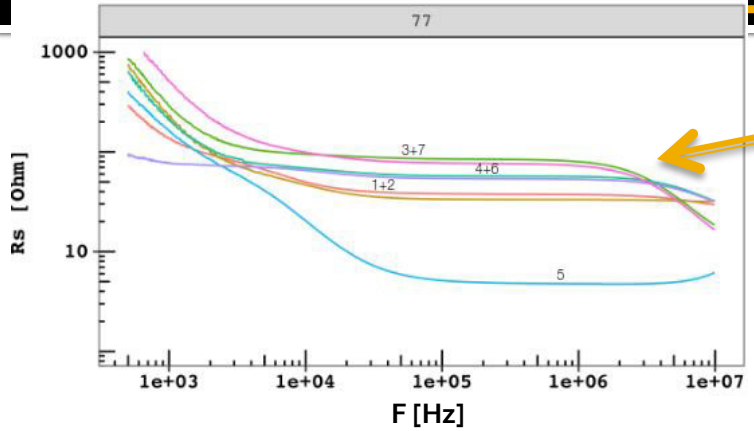

For some SiPM classes Rq nullifies at few MHz

In this case R_s avoid the NG divergence at $\sqrt{\frac{GBP}{2\pi R_f N C_q}}$

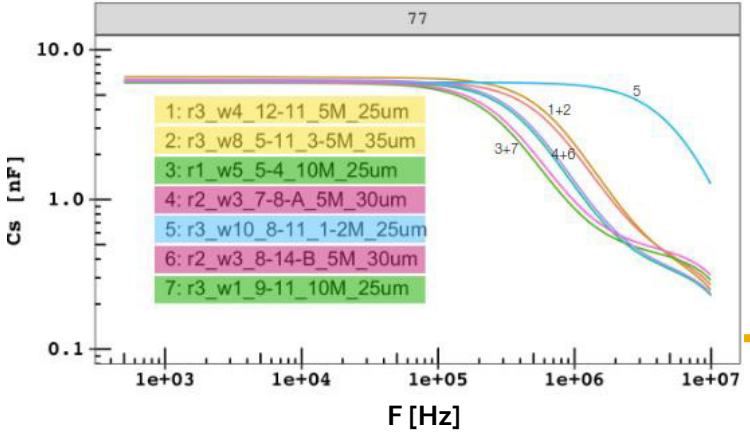

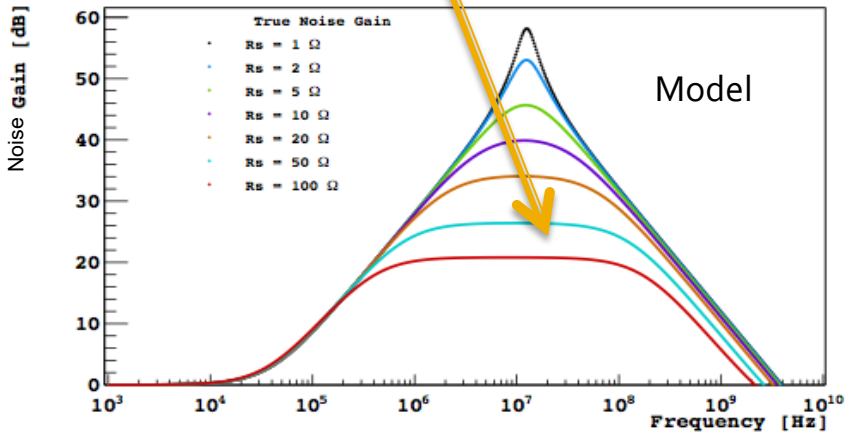

Amplifier selection

Heterojunction electronics

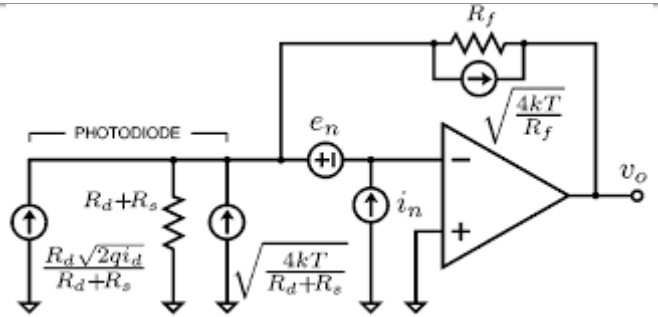

For fast TIA amplifiers e_n is more important than i_n

FET technology typically

- $e_n \sim 4$ nV/√Hz & $i_n \sim 10$ fA/√Hz

FET technology may not be the best choice

- Most producers are distributing heterojunction BJT based amplifiers
  - For high bandwidth applications GHz
  - For very low noise applications sub-nV/√Hz

- HBTs are great signal amplifiers at cryogenic temperature
  - They are BJT -> very low e_n
  - Low 1/f noise
  - Noise and BW are better at cryogenic temperature

LMH6629 characterization

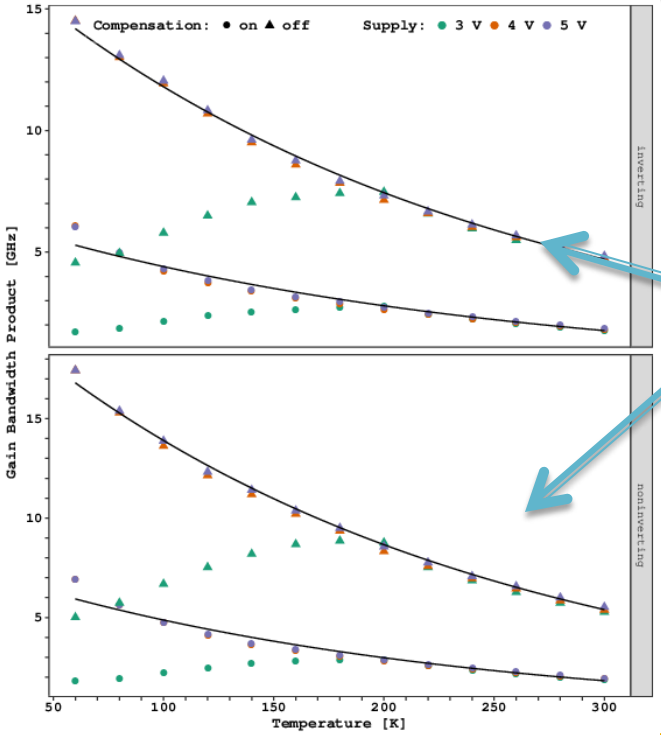

LMH6629 from TI:

- Works down to 40 K
- Stable for |Av| > 10
- Very high bandwidth
  - Increasing at low T
  - ~0.2 pF in Fb path
- Very low noise
- Max bias 5 V
  - 60 – 80 mW
  - P_{out}1dB = 16 dBm (3.8 Vpp)

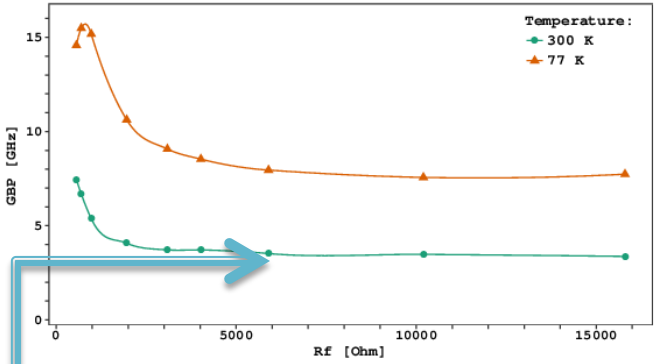

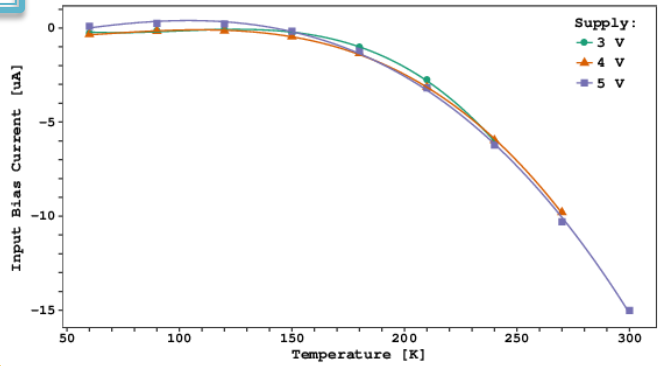

LMH6629 Noise Model

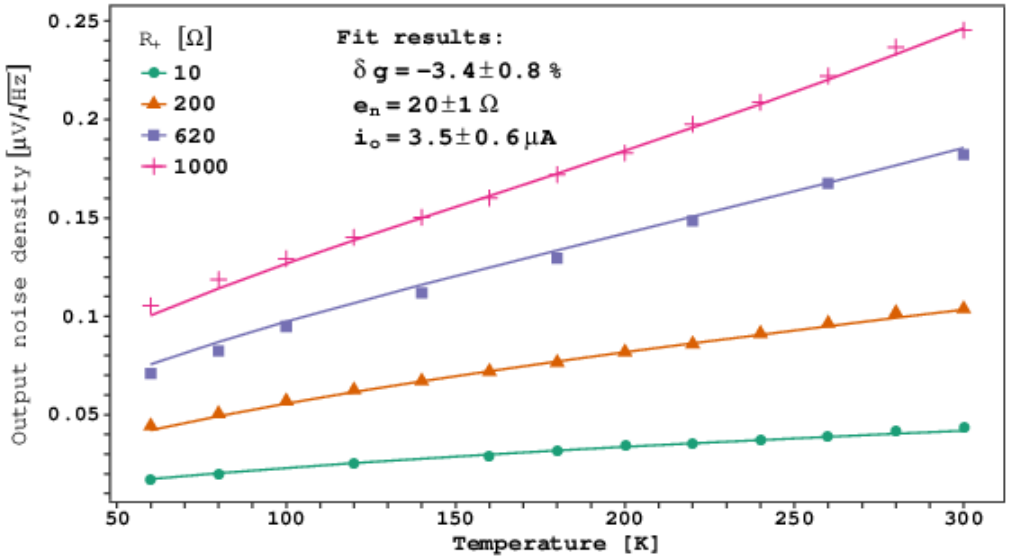

$$N_o = \frac{G}{2}\sqrt{4k_B T R_{eq}^J + e_n^2(T) + i_n^2(T) R_i^2}$$

Where:

constant

- R_{eq} accounts for all resistors
- e_n is modeled as a Johnson source
- i_n is modeled as Shotky noise of $|i_b| + |i_o|$
- N is the output noise density @ 1MHz

The fit reproduces the data at better than 2.5 %

<u>The voltage noise density of the LMH6629 is equivalent to a 20 Ω resistor</u>

M D'Incecco et al., IEEE TNS 65,4,18

DarkSide-20k Amplifier

TIA design & results on single SiPMs

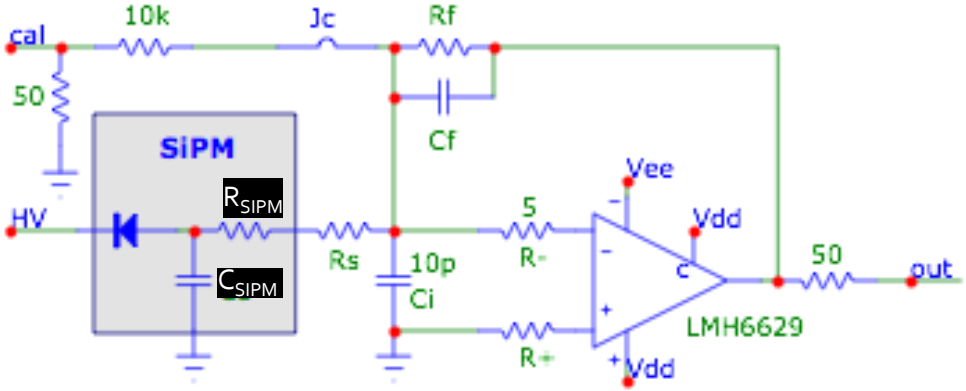

Standard Transimpedance design except:

- Few tweaks for stabilization
  - R_+ , R_-, C_i
- C_f is due to parasitic effects (~0.2 pF)
- The series resistor Rs

TIA design & results on single SiPMs

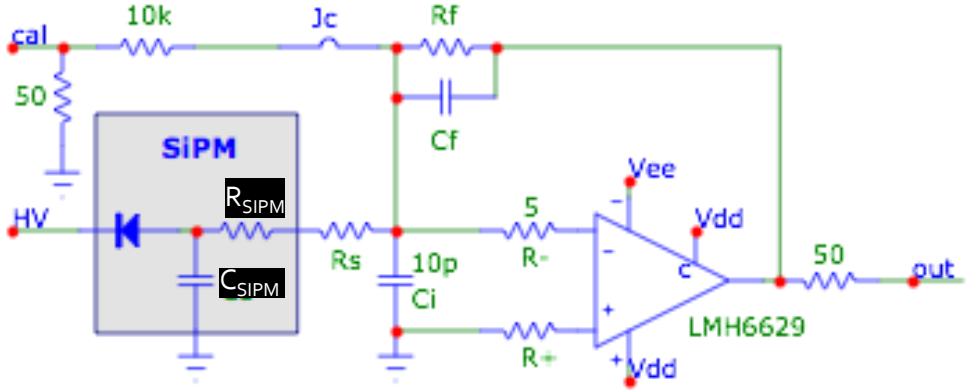

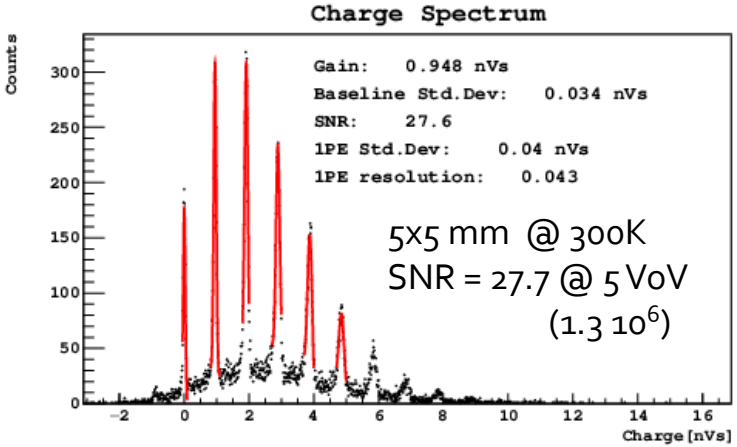

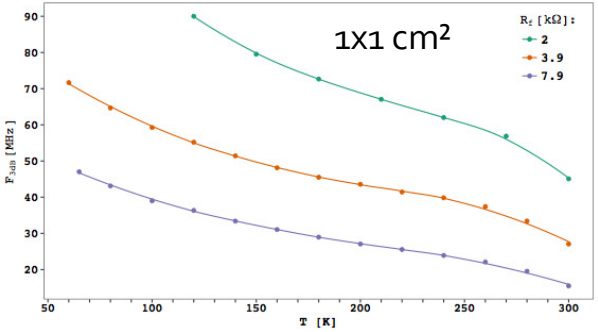

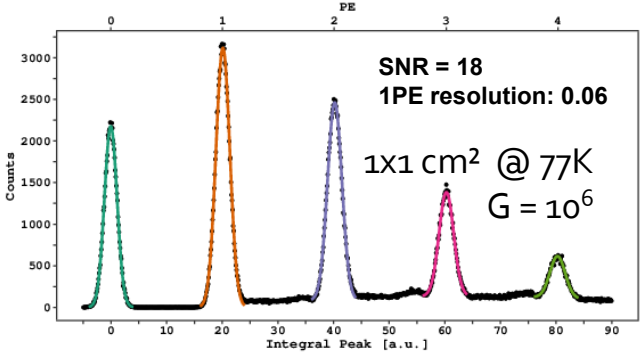

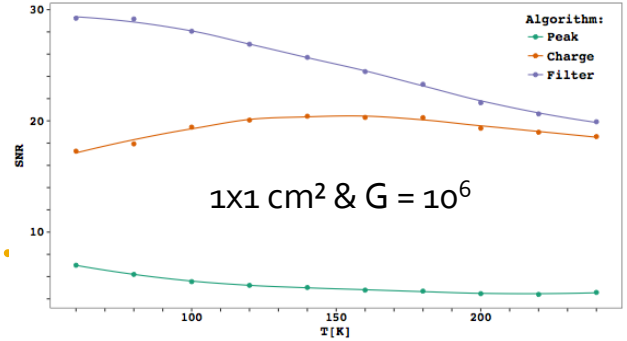

Timing

1 cm² @ 77 K:
Using matched filter
Gain 10^6

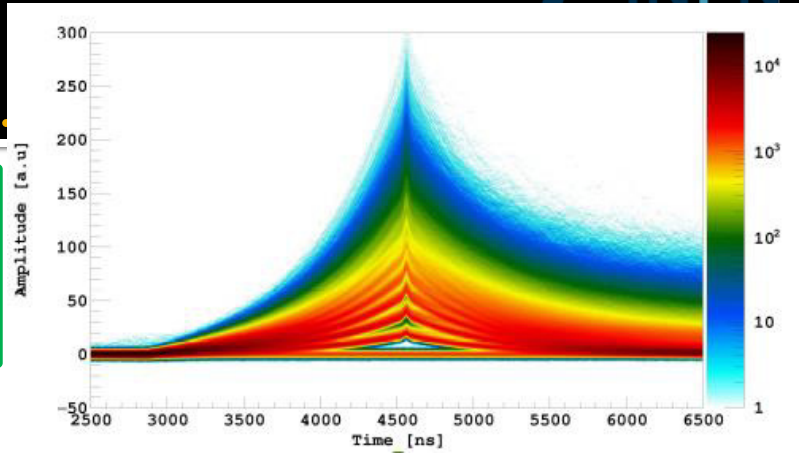

With standard NUV-HD-LF

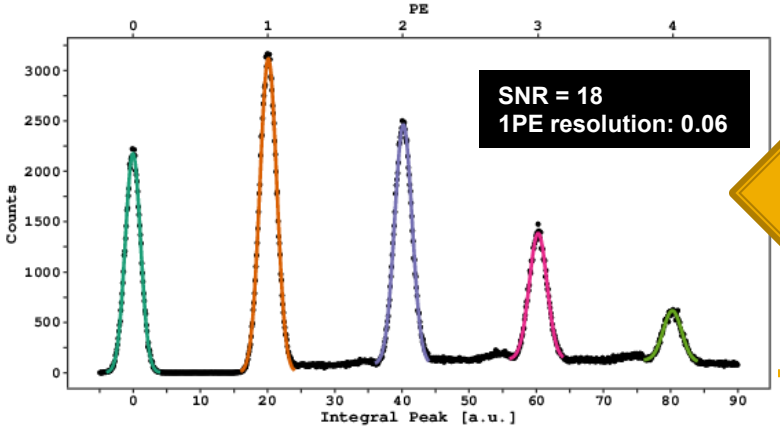

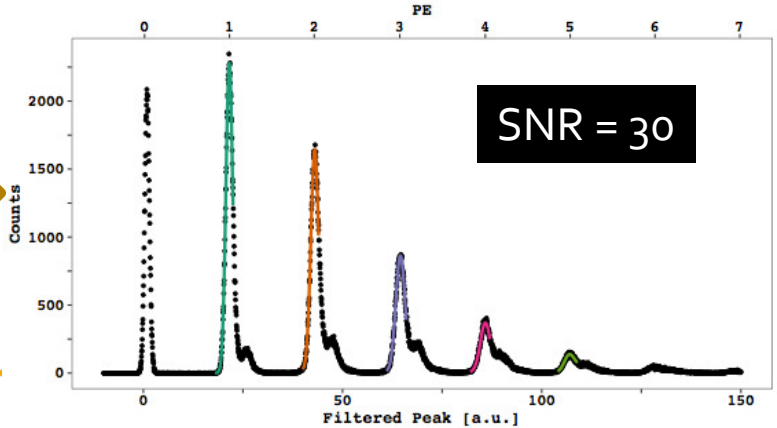

Timing

1 cm² @ 77 K:
Using matched filter
Gain 10^6

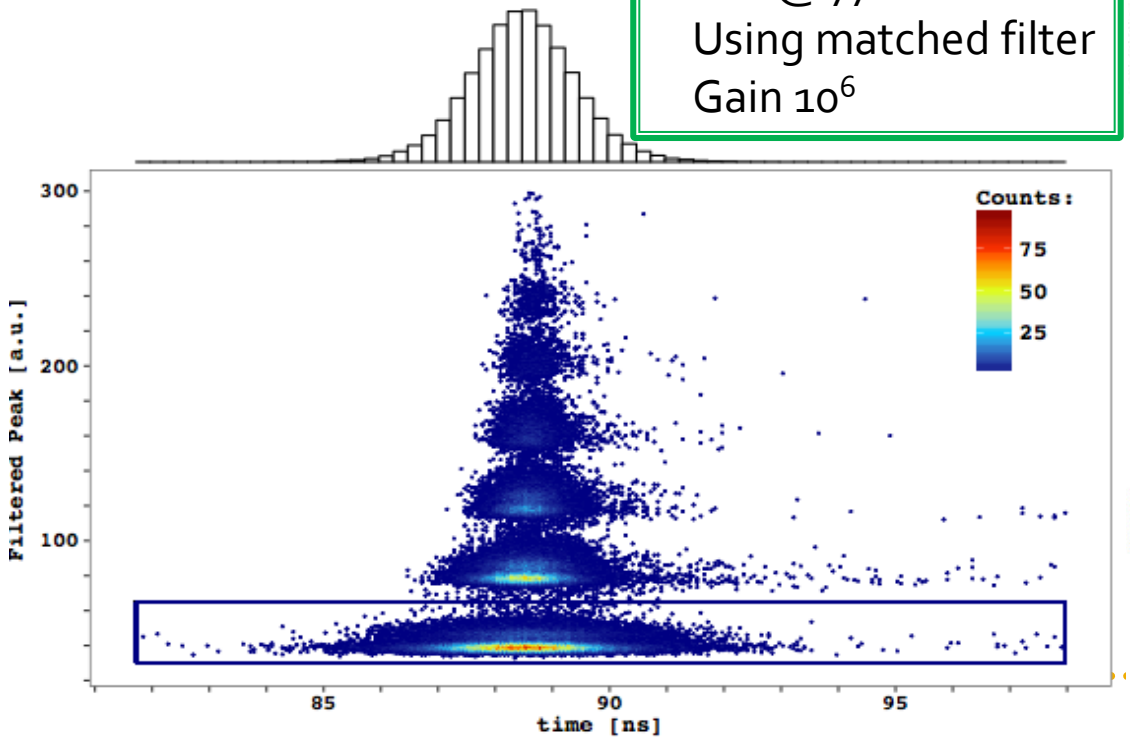

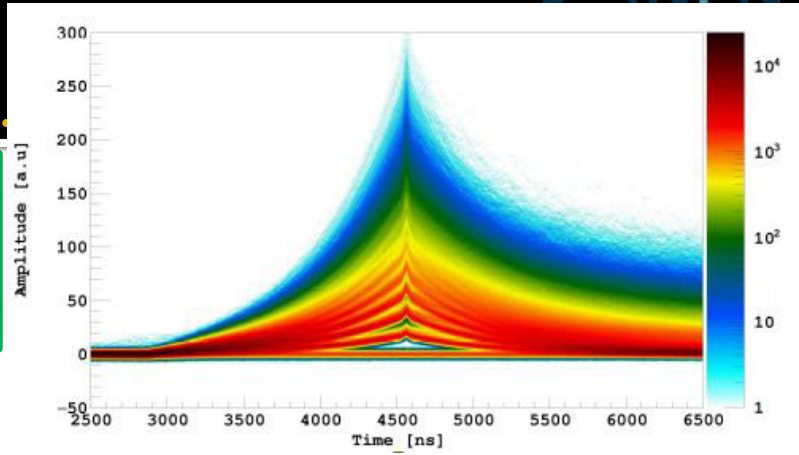

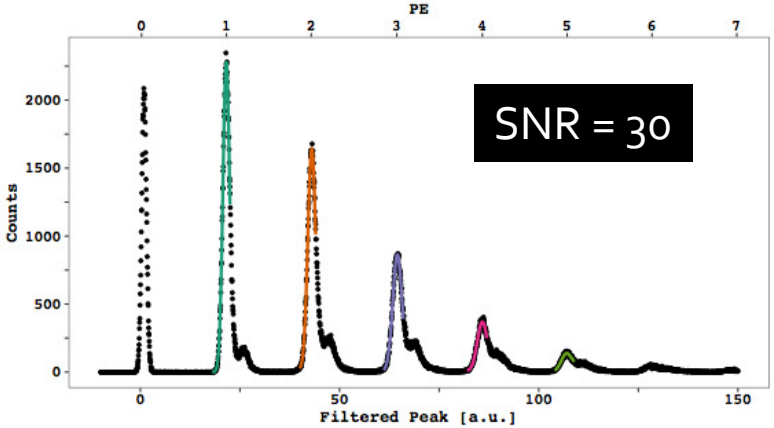

SNR = 30

Noise Model for $F < \frac{1}{2\pi C_q R_q} \simeq 4$ MHz

$$n_I = \frac{\sqrt{4K_BT\left(R_{eq} + R_s + R_n\right)}}{R_{eq} + R_s}$$

10% of noise

1 cm² @ 77 K:
$R_n = 20\ \Omega$
$R_s = 20\ \Omega$
$R_{eq} = 60\ \Omega$
$R_f = 3.9\ k\Omega$
$n_o = -141$ dBm

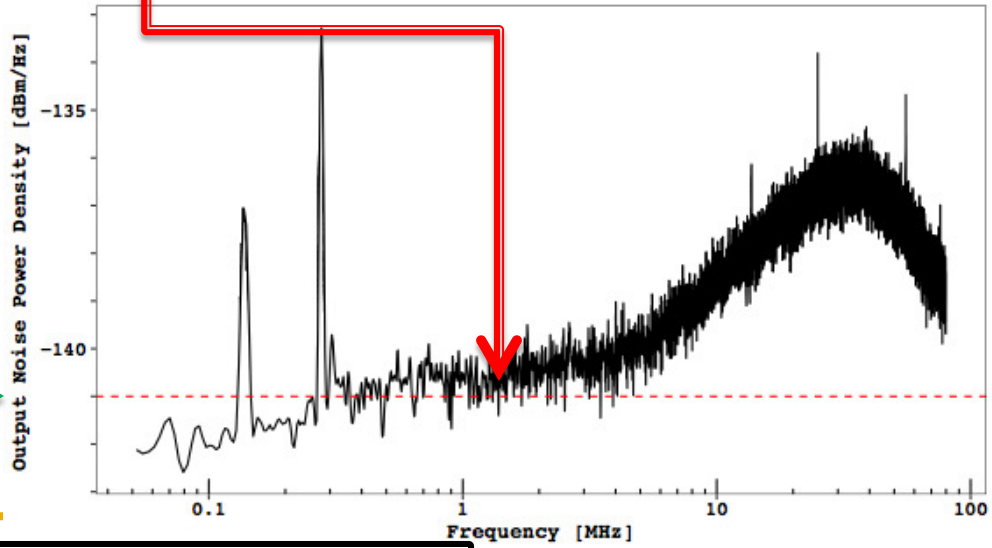

M D'Incecco et al., IEEE TNS 65,4,18

DarkSide-20k ganging scheme

From 1 cm² to 24 cm²

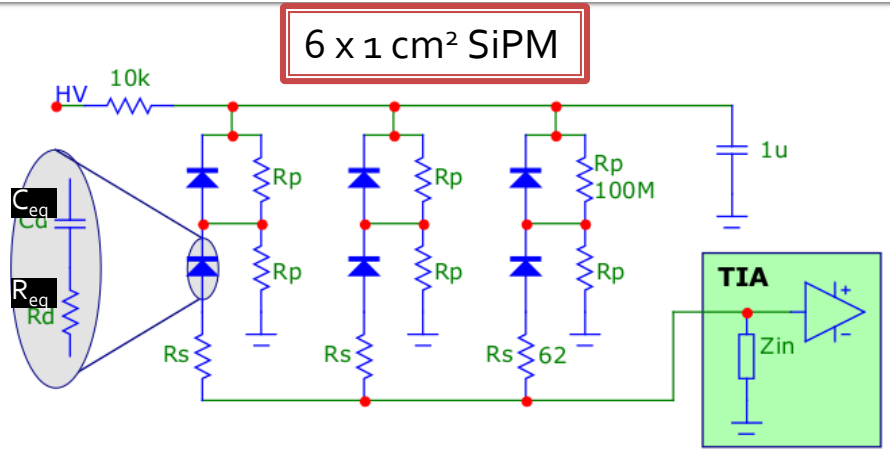

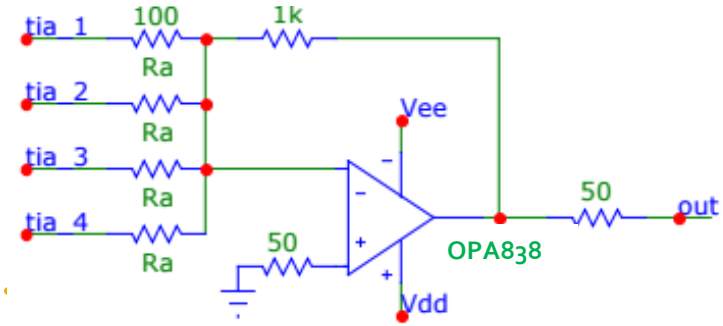

- To read 6 cm² with the same amplifier a hybrid ganging solution is used
  - Virtual ground summing does not change the shape of the signal
- This design increases the capacitance seen by the TIA only by 50%
- <u>For cryogenic use a precision voltage divider is required</u>
  - Otherwise the voltage division will be defined by the leakage current

Four 6 cm² channels are summed with an active adder

24 cm² at 77 K

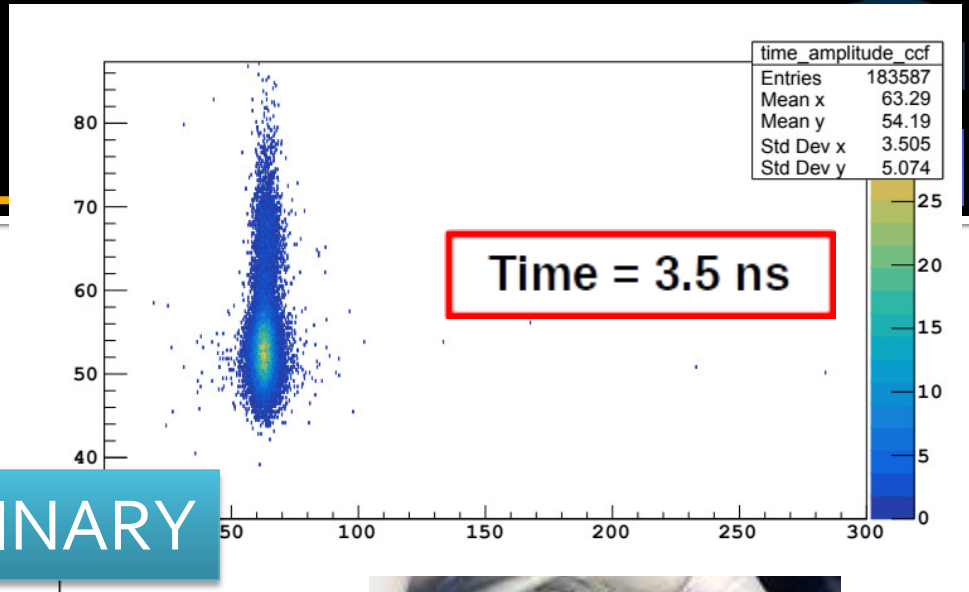

PRELIMINARY

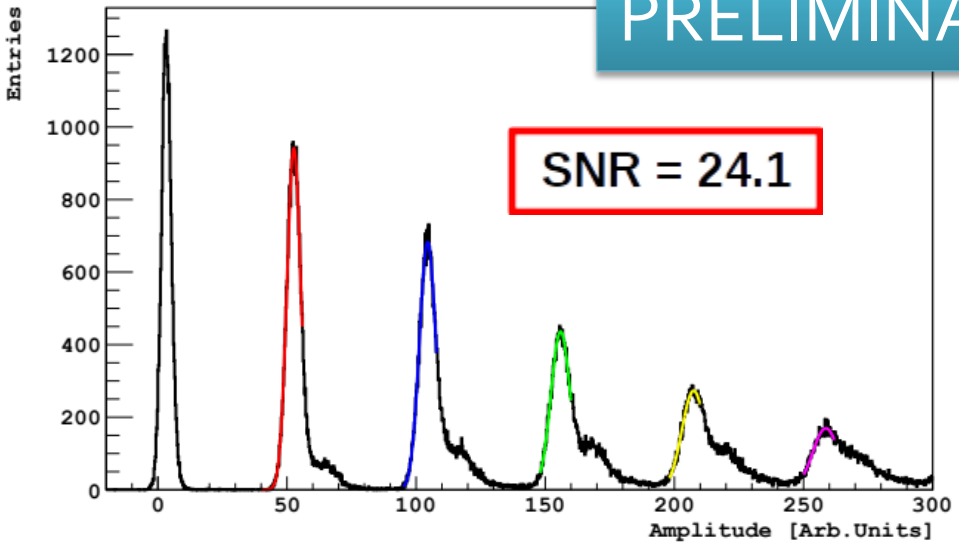

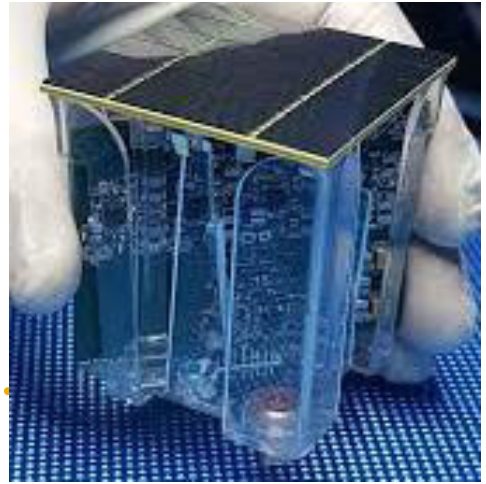

DUNE SP ganging scheme

ARAPUCA

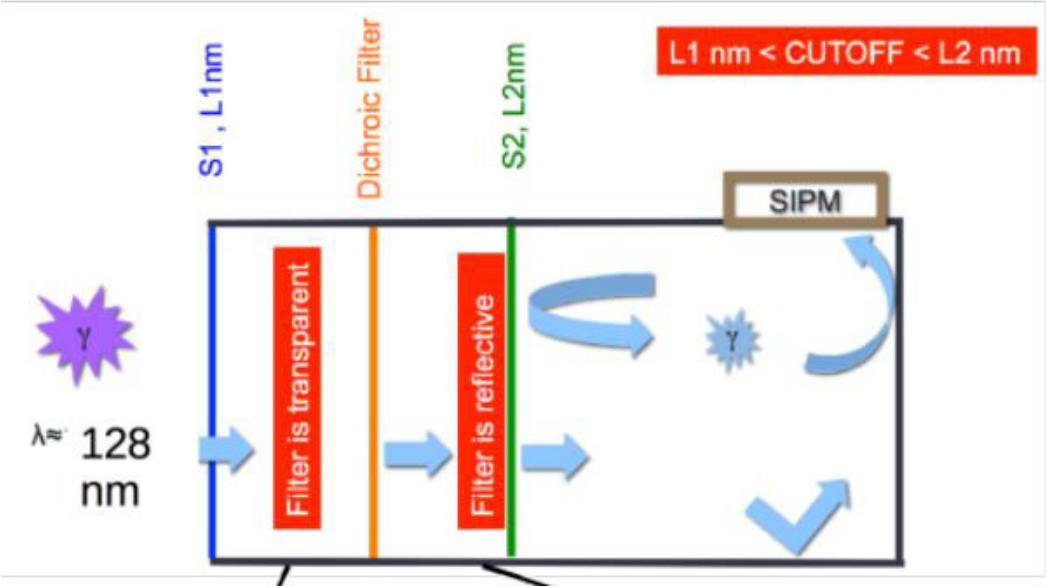
S1 , L1nm
Dichroic Filter
S2, L2nm
L1 nm < CUTOFF < L2 nm
SIPM
γ
λ≈ 128 nm
Filter is transparent
Filter is reflective
γ

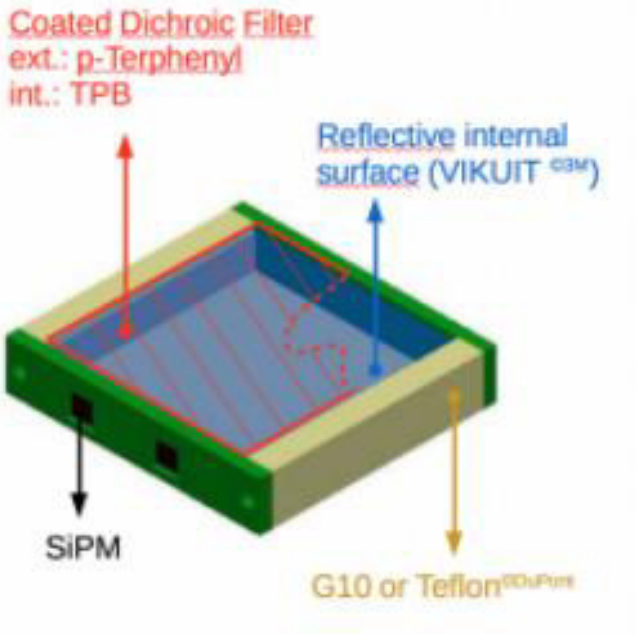
Coated Dichroic Filter
ext.: p-Terphenyl
int.: TPB
Reflective internal surface (VIKUIT 3M)
SiPM
G10 or Teflon

DUNE SP Ganging

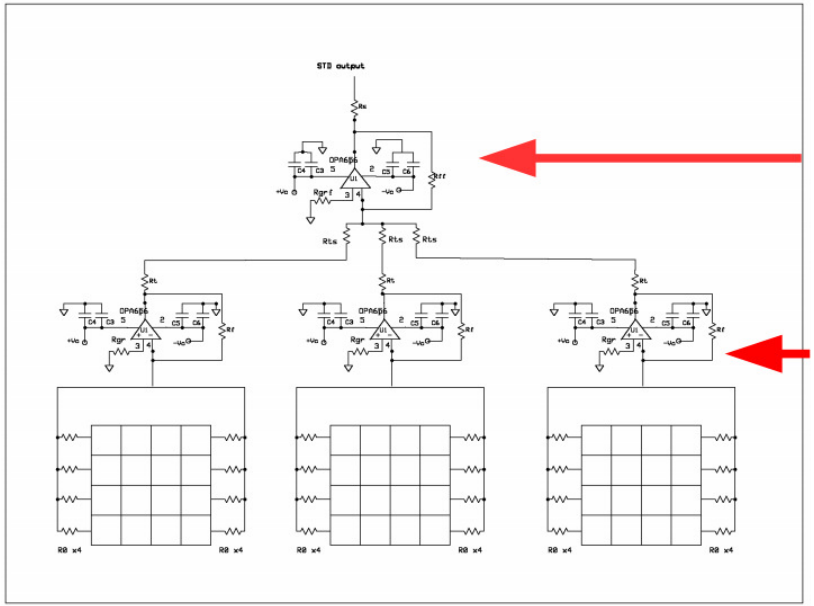

A second stage works as a buffer to sum the first stages

The virtual ground of the inverting imput allows to connect SiPMs decoupling the capacitance and hence preserving the signal shape.

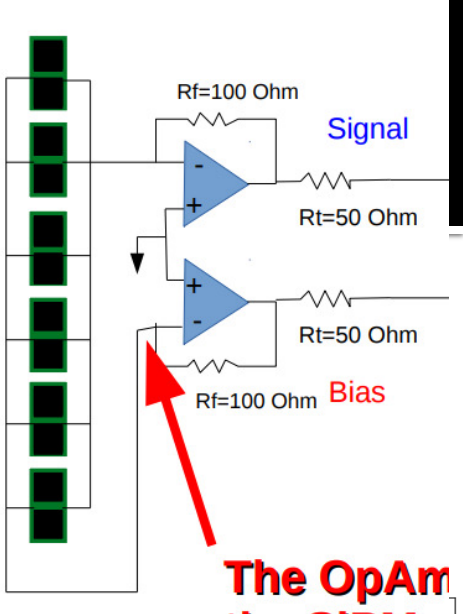

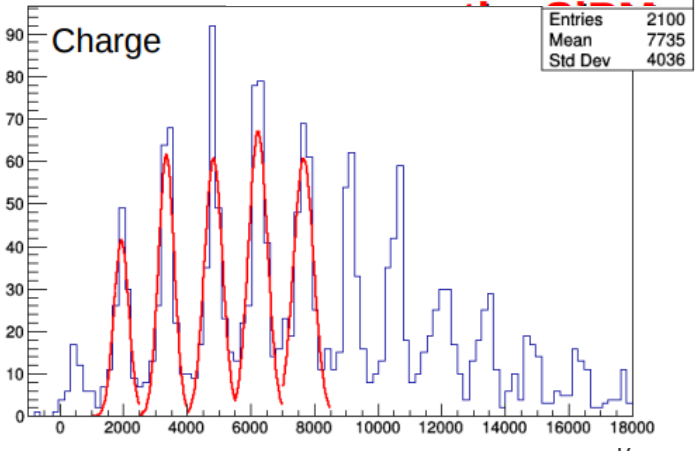

Design similar to DarkSide

DUNE SP Ganging

OPA656
FET-Based
$e_n = 7\ nV/\sqrt{Hz}$ (300 K)
~ 3 kΩ

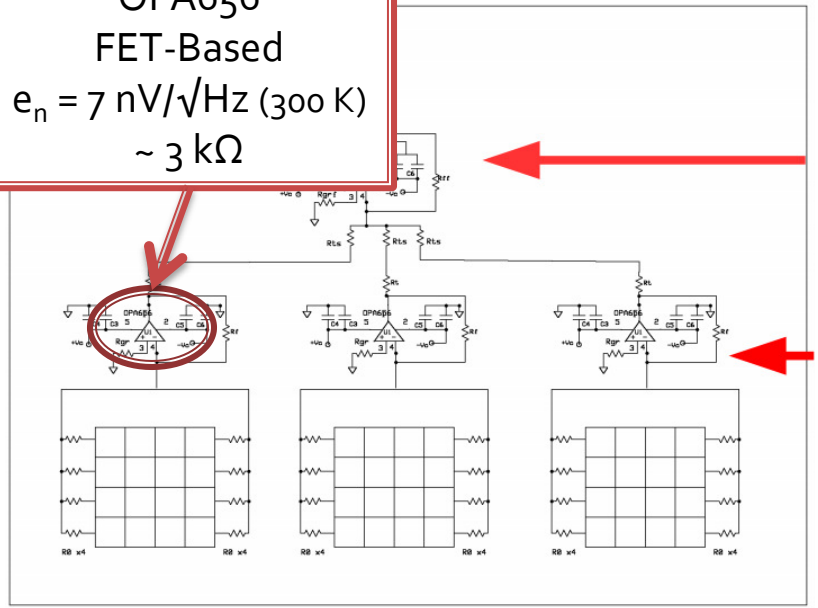

A second stage works as a buffer to sum the first stages

The virtual ground of the inverting imput allows to connect SiPMs decoupling the capacitance and hence preserving the signal shape.

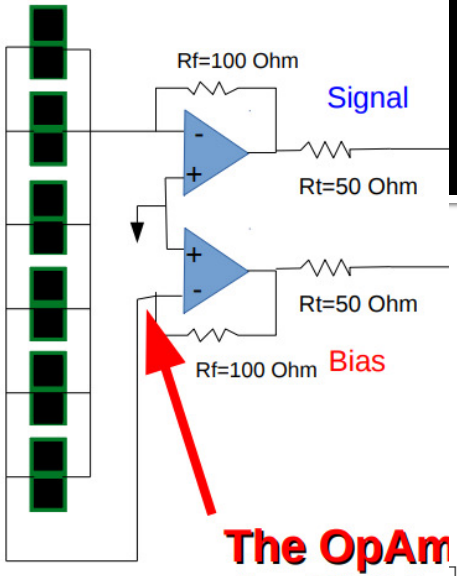

The OpAm

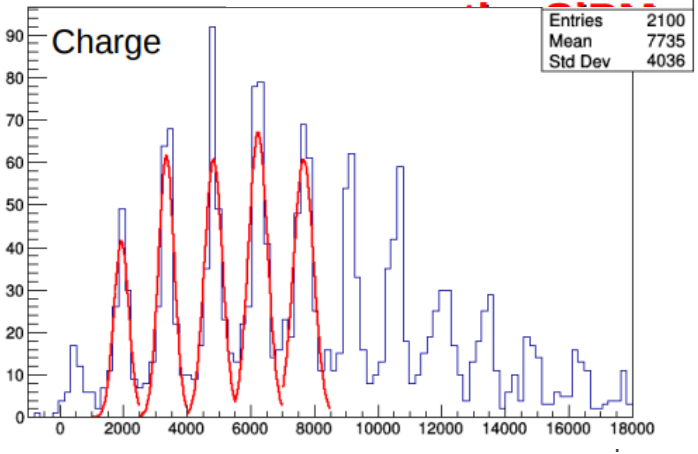

Design similar to DarkSide

Conclusions

- Interest on cryogenic readout is increasing
- We proved that large SiPM arrays O(25 cm^2) can be read with outstanding SNR and timing performances
  - SNR > 20 & timing down to few ns
    - Shortly we will test fast FBK SiPMs tiles which should increase further the SNR
- The cryogenic electronics built on commercial components ready available
  - Using radiopure components
- Groups are starting to develop cryogenic capable integrated solutions
  - INFN-Torino for DarkSide
  - NEXO 3D development

Thank you

AP Bursts?

Very recently we discovered some shorts O(10 s) bursts with up to many thousands PE

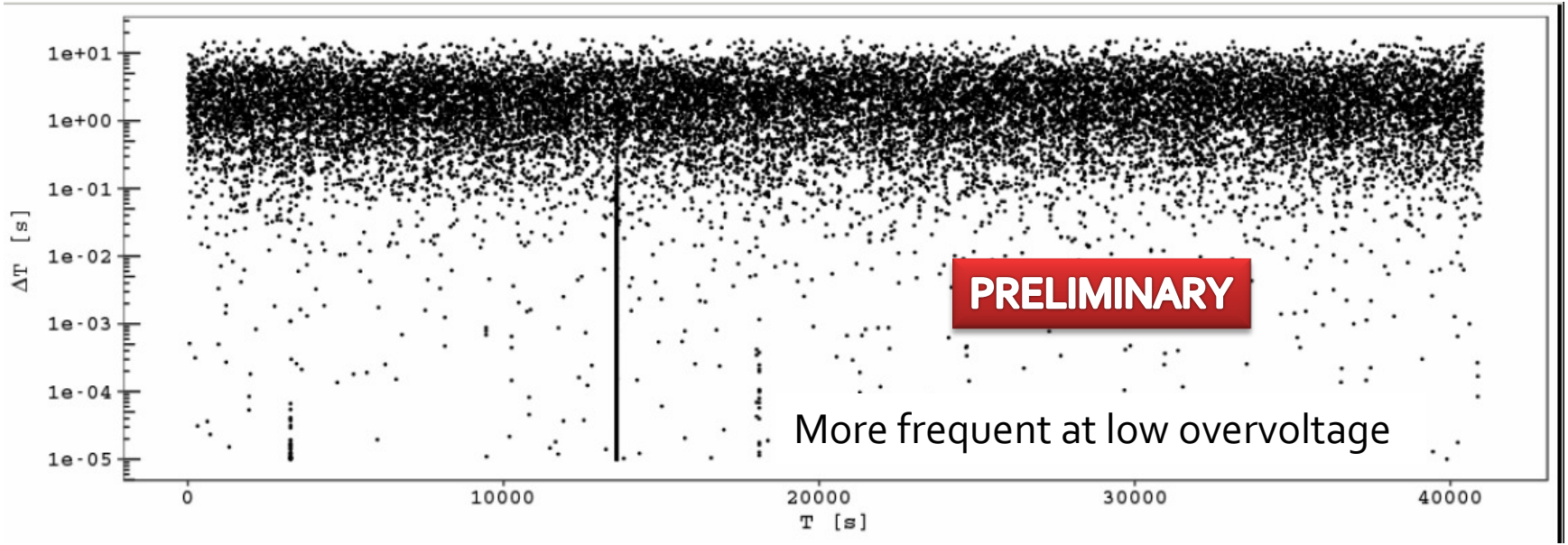

Matched filtering

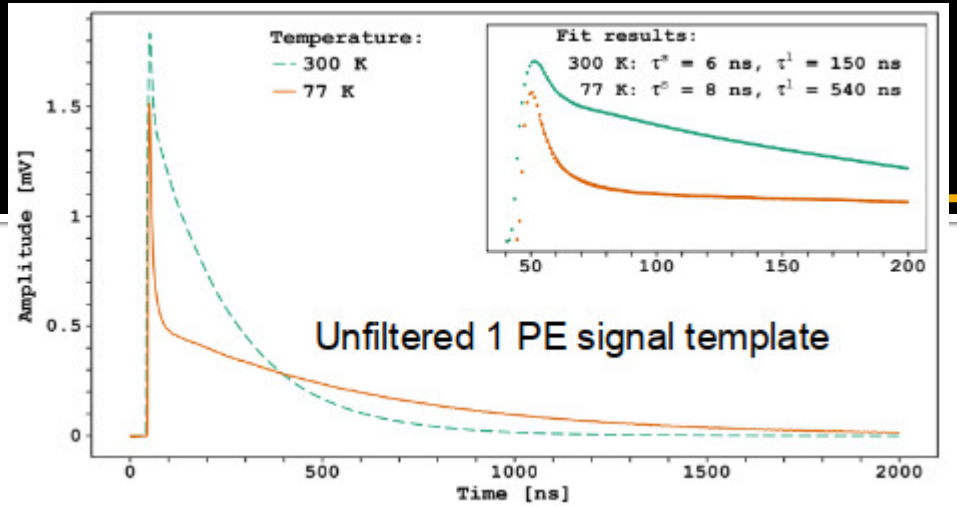

Matched filter is the optimal linear filter to extract a signal of know shape in the presence of additive stochastic noise.

The filtered signal is obtained by cross-correlating the raw waveform for the signal template

The output is symmetric around the peak, giving a better identification of the timing.

We successfully tested an online FPGA based implementation

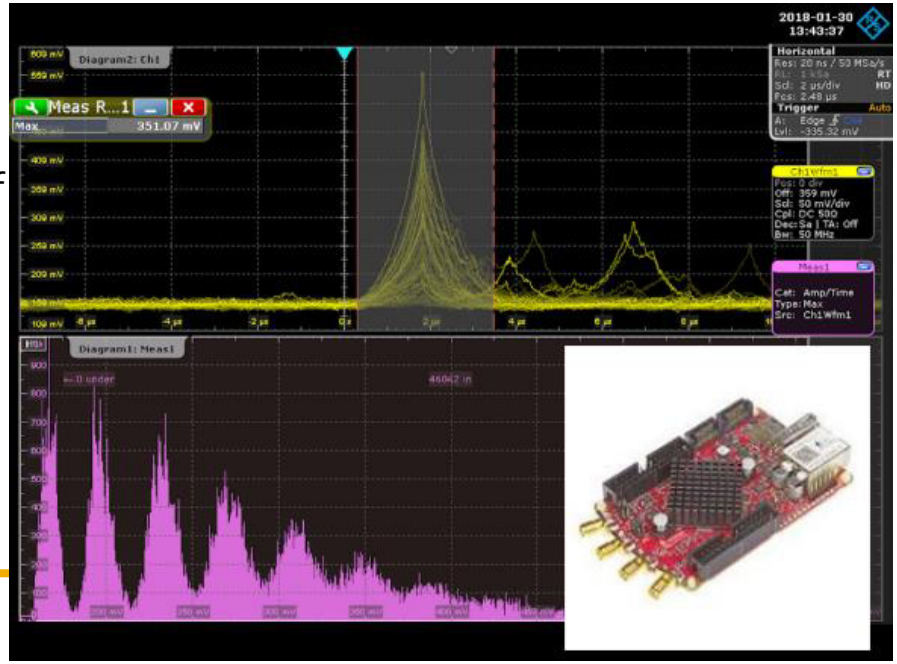

6 cm² SiPM readout

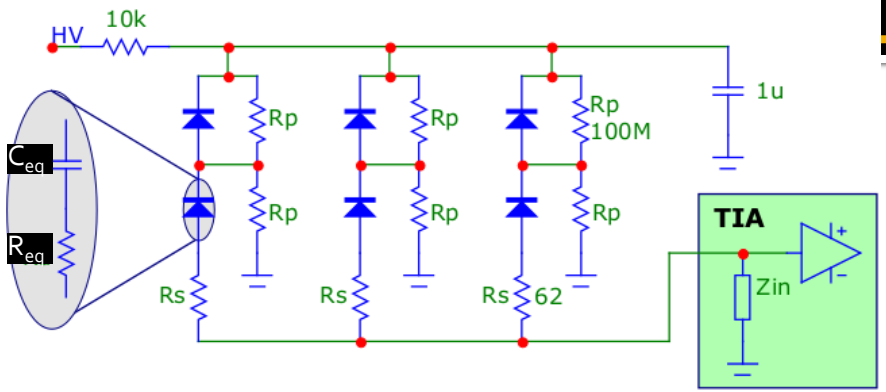

$$S_I^{\max} = \frac{G}{2\tau} \propto \frac{G}{2\left(2R_{eq} + R_s\right)}$$

$$n_I = \frac{\sqrt{4K_BT((2R_{eq} + R_s)/3 + R_n)}}{(2R_{eq} + R_s)/3}$$

$$S/N \propto \frac{G}{2 \times 3\sqrt{4K_BT((2R_{eq} + R_s)/3 + R_n)}}$$

6 cm² SiPM readout

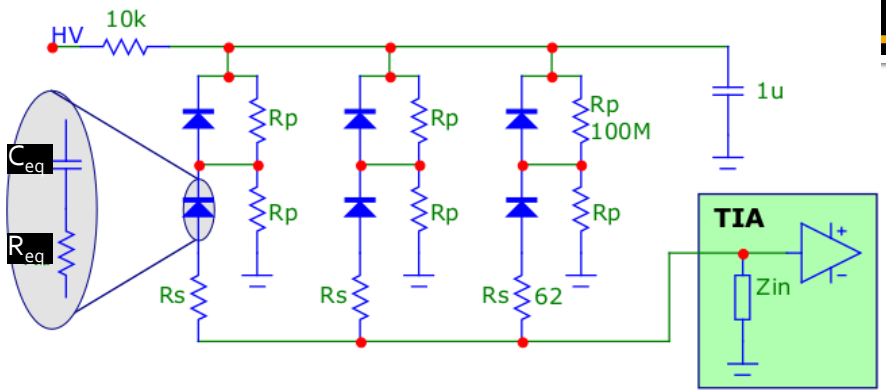

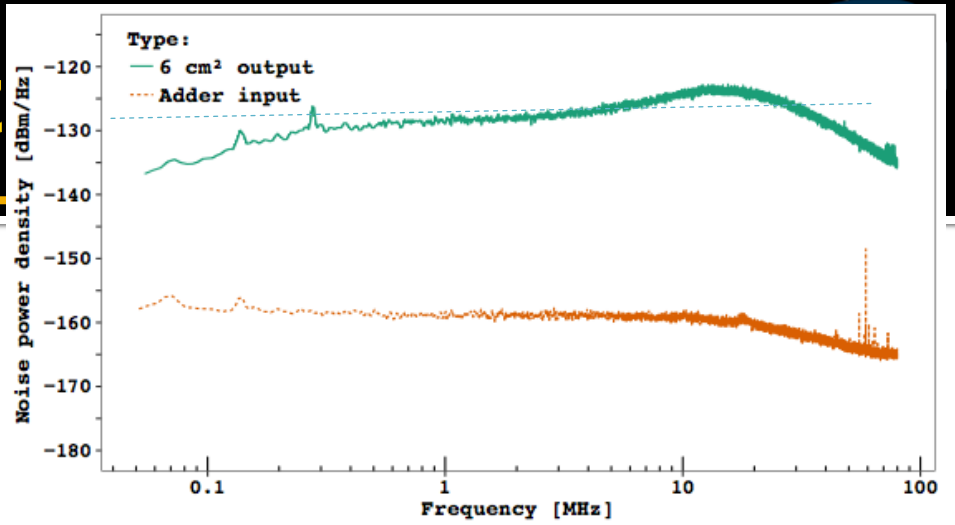

6 cm² @ 77 K:
$R_n = 20\ \Omega$
$R_s = 60\ \Omega$
$R_{eq} = 60\ \Omega$
$R_f = 10\ k\Omega$
$n_o = -127$ dBm

$$S_I^{\max} = \frac{G}{2\tau} \propto \frac{G}{2\,(2R_{eq} + R_s)} \simeq \frac{G}{6R_s}$$

$$n_I = \frac{\sqrt{4K_BT((2R_{eq} + R_s)/3 + R_n)}}{(2R_{eq} + R_s)/3} \simeq \frac{\sqrt{4K_BT(R_{eq} + R_n)}}{R_{eq}}$$

$$S/N \propto \frac{G}{2 \times 3\sqrt{4K_BT((2R_{eq} + R_s)/3 + R_n)}} \simeq \frac{G}{6\sqrt{4K_BT(R_{eq} + R_n)}}$$

6 cm² SiPM readout

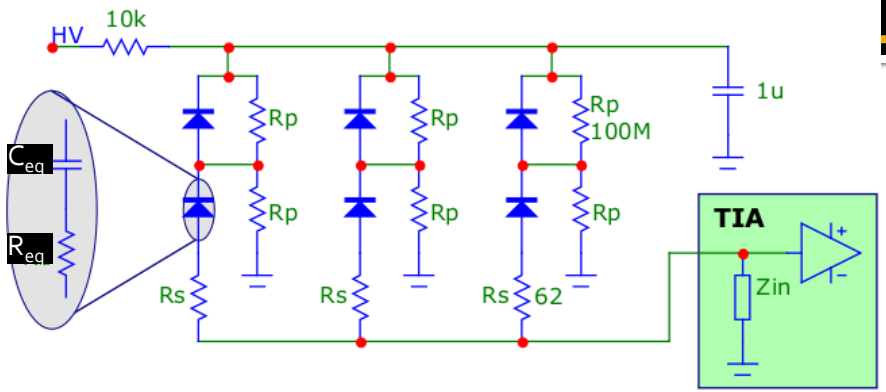

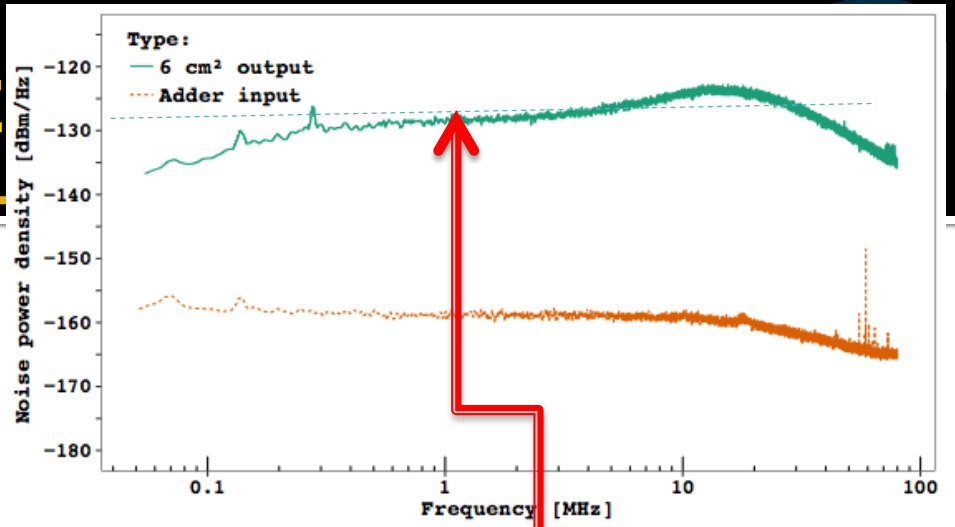

15% of noise

6 cm² @ 77 K:
R_n = 20 Ω
R_s = 60 Ω
R_{eq} = 60 Ω
R_f = 10 k Ω
n_o = -127 dBm

$$S_I^{\max} = \frac{G}{2\tau} \propto \frac{G}{2\,(2R_{eq}+R_s)} \simeq \frac{G}{6R_s}$$

$$n_I = \frac{\sqrt{4K_BT((2R_{eq}+R_s)/3+R_n)}}{(2R_{eq}+R_s)/3} \simeq \frac{\sqrt{4K_BT(R_{eq}+R_n)}}{R_{eq}}$$

$$S/N \propto \frac{G}{2\times 3\sqrt{4K_BT((2R_{eq}+R_s)/3+R_n)}} \simeq \frac{G}{6\sqrt{4K_BT(R_{eq}+R_n)}}$$

6 cm² SiPM readout

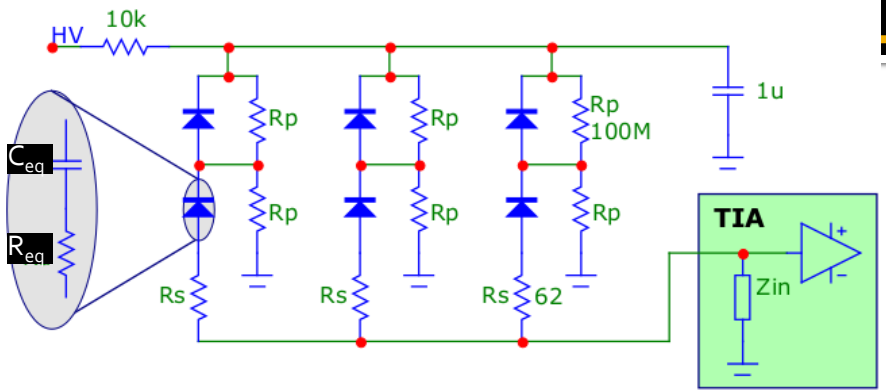

$$S/N \propto \frac{G}{\sqrt{6}\sqrt{4K_BT(R_{eq}+R_s+R_n)}}$$

6 cm² @ 77 K:
$R_n = 20\ \Omega$
$R_s = 60\ \Omega$
$R_{eq} = 60\ \Omega$
$R_f = 10\ k\Omega$
$n_o = -127$ dBm

$$S_I^{max} = \frac{G}{2\tau} \propto \frac{G}{2\,(2R_{eq}+R_s)} \simeq \frac{G}{6R_s}$$

$$n_I = \frac{\sqrt{4K_BT((2R_{eq}+R_s)/3+R_n)}}{(2R_{eq}+R_s)/3} \simeq \frac{\sqrt{4K_BT(R_{eq}+R_n)}}{R_{eq}}$$

$$S/N \propto \frac{G}{2\times 3\sqrt{4K_BT((2R_{eq}+R_s)/3+R_n)}} \simeq \frac{G}{6\sqrt{4K_BT(R_{eq}+R_n)}}$$

6 cm² SiPM readout

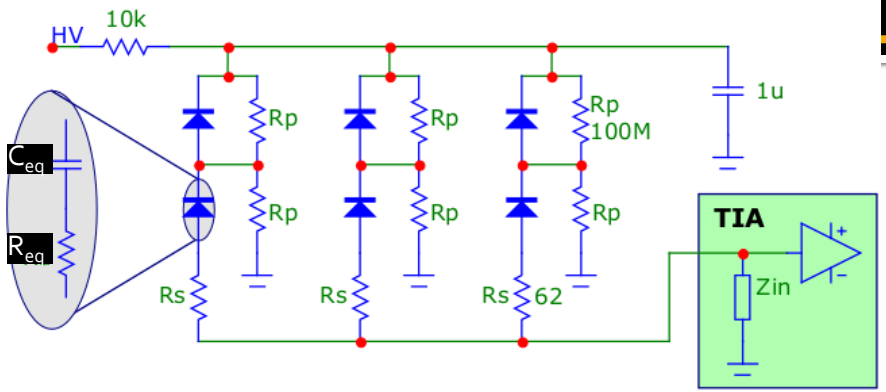

$$S/N \propto \frac{G}{\sqrt{6}\sqrt{4K_BT(R_{eq}+R_s+R_n)}}$$

6 cm² @ 77 K:
R_n = 20 Ω
R_s = 60 Ω
R_{eq} = 60 Ω
R_f = 10 k Ω
n_o = -127 dBm

$$S_I^{max} = \frac{G}{2\tau} \propto$$

$$n_I = \frac{\sqrt{4K_BT}}{}$$

$$S/N \propto \frac{}{2 \times 3\sqrt{}}$$

Open space to integration? It depends

For simple TIA with MOS technology
Typical e_n ~ 2 nV/√Hz <-> R_n(MOS) ~ 1 kΩ

For smarter designs work in progress
(see slides from Manuel Rolo)